To the Citizens of Wiscasset

When you vote on June ??, ???? on the proposed Town budget for 2013, you also have the opportunity to vote on a warrant to approve the formation of a committee to evaluate the possible withdrawal of Wiscasset from RSU 12.

The purpose of this notice is to clarify the warrant article.

The Department of Education requires that any withdrawal warrant article contain specific language as put forward in the state law for school consolidation.

Warrant article wording:

Do you favor filing a petition for withdrawal with the board of directors of regional school unit 12 and with the Commissioner of Education, authorizing the withdrawal committee to expend $55,000 for this purpose?

What you are voting for: This is not the final vote!

The vote in June is only the first step in a formal process overseen by the Department of Education. The vote is only to establish a withdrawal committee as called for under state law to begin the withdrawal process from RSU 12. The money in the warrant is to cover legal and consultant's fees associated with the study and negotiations.

Who will be on the committee?

The selectmen will appoint a representative from the board, a citizen from the general public and a representative from the group who filed the petition (WERP). The RSU 12 Board will appoint a Wiscasset RSU 12 board member as the forth committee member.

What are the responsibilities of the Withdrawal Committee?

To provide a detailed plan under a template outlined in the law on how to meet the educational needs of all Wiscasset students.

This may include the following school structure options:

- Joining another existing school system
- Establishing a new school system with adjoining towns
- A stand-alone Wiscasset school system

To provide a detailed financial analysis of all associated expenses in withdrawing from the RSU and in joining or setting up a new school system including:

- Facilities
- Transportation
- Central administrative staff, if any, depending on school structure
- Teachers/support staff
- Withdrawal costs
- Costs in joining another school system

To develop a plan for the return and division of all real estate and personal property to the town, and the distribution of other assets between Wiscasset and the RSU 12.

After this report and agreement is finalized, it is submitted to the Commissioner of Education for approval.

If the plan is approved by the Commissioner, there will be a second final vote by Wiscasset voters to approve or disapprove the final plan to withdraw or stay in the RSU.

Maine Revised Statutes

§1466 PDF
§1466WORD/RTF
STATUTE SEARCH
CH. 103-A CONTENTS
TITLE 20-A CONTENTS
LIST OF TITLES
DISCLAIMER
MAINE LAW
REVISOR'S OFFICE
MAINE LEGISLATURE

§1465

Title 20-A: EDUCATION

Part 2: SCHOOL ORGANIZATION
Chapter 103-A: REGIONAL SCHOOL UNITS
Subchapter 2: FORMATION OF REGIONAL SCHOOL UNIT

§1467

§1466. Withdrawal of a single municipality from a regional school unit

(CONTAINS TEXT WITH VARYING EFFECTIVE DATES)

1. Petition. Beginning January 1, 2012, the residents of a municipality that has been a member of a regional school unit for at least 30 months may petition to withdraw from the regional school unit in accordance with this subsection.

A. Ten percent of the number of voters in the municipality who voted at the last gubernatorial election must sign the petition to withdraw from the regional school unit. [2009, c. 580, §9 (NEW).]

B. At least 10 days before the special election called pursuant to this paragraph, the municipal officers of the municipality within the regional school unit shall hold a posted or otherwise advertised public hearing on the petition. The municipal officers shall call and hold a special election in the manner provided for the calling and holding of town meetings or city elections to vote on the withdrawal from the regional school unit. [2009, c. 580, §9 (NEW).]

C. The petition to withdraw from the regional school unit must be approved by secret ballot by a majority vote of the voters present and voting before it may be presented to the regional school unit board and the commissioner. Voting in towns must be conducted in accordance with Title 30-A, sections 2528 and 2529, even if the towns have not accepted the provisions of Title 30-A, section 2528, and voting in cities must be conducted in accordance with Title 21-A. [2009, c. 580, §9 (NEW).]

For the purposes of this subsection, the 30-month period after which a petition to withdraw may be considered in a member municipality of a school administrative district that was reformulated as a regional school unit pursuant to Public Law 2007, chapter 240, Part XXXX, section 36, subsection 12 is 30 months after the original operational date of the school administrative district; and the 30-month period after which a petition to withdraw may be considered in a member municipality of a school administrative district that did not reformulate as a regional school unit but that became a member entity

of an alternative organizational structure is 30 months after the operational date of the alternative organizational structure.

[2011, c. 328, §1 (AMD); 2011, c. 328, §2 (AFF) .]

2. Form. The article to be voted upon must be in substantially the following form:

"Article: Do you favor filing a petition for withdrawal with the board of directors of regional school unit (name of regional school unit) and with the Commissioner of Education, authorizing the withdrawal committee to expend $ (insert amount) and authorizing the (municipal officers; i.e., selectpersons, town council, etc.) to issue notes in the name of the (name of the municipality) or otherwise pledge the credit of the (name of the municipality) in an amount not to exceed $ (insert amount) for this purpose?

Yes No"

[2009, c. 580, §9 (NEW) .]

3. Notice of vote. If residents of the municipality vote favorably on a petition for withdrawal, the clerk shall immediately give written notice, by registered mail, to the secretary of the regional school unit and the commissioner that must include:

A. The petition adopted by the voters, including the affirmative and negative votes cast; and [2009, c. 580, §9 (NEW).]

B. An explanation by the municipal officers, stating to the best of their knowledge the reason or reasons why the municipality seeks to withdraw from the regional school unit. [2009, c. 580, §9 (NEW).]

[2009, c. 580, §9 (NEW) .]

4. Agreement for withdrawal; notice; changes in agreement; final agreement. The agreement for withdrawal must comply with this subsection.

A. The commissioner shall direct the municipal officers of the petitioning municipality to select representatives to a withdrawal committee as follows: one member from the municipal officers, one member from the general public and one member from the group filing the petition. The commissioner shall also direct the directors of the regional school unit board representing the petitioning municipality to select one member of the regional school unit board who represents that municipality to serve on the withdrawal committee. The municipal officer and the member of the regional school unit board serve on the withdrawal committee only so long as they hold their respective offices. Vacancies must be filled by the municipal officers and the regional school unit board. The chair of the regional school unit board shall call a meeting of the withdrawal committee

within 30 days of the notice of the vote in subsection 3. The chair of the regional school unit board shall open the meeting by presiding over the election of a chair of the withdrawal committee. The responsibility for the preparation of the agreement rests with the withdrawal committee, subject to the approval of the commissioner. The withdrawal committee may draw upon the resources of the department for information not readily available at the local level and employ competent advisors within the fiscal limit authorized by the voters. The agreement must be submitted to the commissioner within 90 days after the withdrawal committee is formed. Extensions of time may be granted by the commissioner upon the request of the withdrawal committee.

(1) The agreement must contain provisions to provide educational services for all students of the petitioning municipality within the regional school unit. The agreement must provide that during the first year following the withdrawal students may attend the school they would have attended if the petitioning municipality had not withdrawn. The allowable tuition rate for students sent from one municipality to another in the former regional school unit must be determined under section 5805, subsection 1, except that it is not subject to the state per pupil average limitation in section 5805, subsection 2.

(2) The agreement must establish that the withdrawal takes effect at the end of the regional school unit's fiscal year.

(3) The agreement must establish that the withdrawal will not cause a need within 5 years from the effective date of withdrawal for school construction projects that would be eligible for state funds. This limitation does not apply when a need for school construction existed prior to the effective date of the withdrawal or when a need for school construction would have arisen even if the municipality had not withdrawn.

(4) The agreement must establish how transportation services will be provided.

(5) The agreement must provide for administration of the new administrative unit, which should not include the creation of new supervisory units if at all possible.

(6) The agreement must make provision for the distribution of financial commitments arising from outstanding bonds, notes and any other contractual obligations that extend beyond the proposed date of withdrawal.

(7) The agreement must provide appropriately for the distribution of any outstanding financial commitments to the superintendent of the regional school unit.

(8) The agreement must provide for the continuation and assignment of collective bargaining agreements as they apply to the new or reorganized regional school unit for the duration of those agreements and must provide for the continuation of representational rights.

(9) The agreement must provide for the continuation of continuing contract rights under section 13201.

(10) The agreement must provide for the disposition of all real and personal property and other monetary assets.

(11) The agreement must provide for the transition of administration and governance of the schools to properly elected governing bodies of the newly created administrative unit and must provide that the governing body may not be elected simultaneously with the vote on the article to withdraw unless the commissioner finds there are extenuating circumstances that necessitate simultaneous elections. [2009, c. 580, §9 (NEW).]

B. Within 60 days of the receipt of the agreement, the commissioner shall either give it conditional approval or recommend changes. The changes must be based upon the standards set forth in paragraph A and the commissioner's findings of whether the contents of the agreement will provide for appropriate educational and related services to the students of the petitioning municipality and for the orderly transition of assets, governance and other matters related to the petitioning municipality and the regional school unit. [2009, c. 580, §9 (NEW).]

C. If the commissioner gives conditional approval of the agreement, the commissioner shall notify the regional school unit board and the municipal officers by registered mail of the time and place of a public hearing at least 20 days prior to the date set for the hearing to discuss the merits of the proposed agreement of withdrawal. The chair of the regional school unit board shall conduct the hearing.

(1) The regional school unit board shall post a public notice in each municipality of the time and location of the hearing at least 10 days before the hearing.

(2) Within 30 days following the hearing under this paragraph, the withdrawal committee shall forward the final agreement to the commissioner. [2009, c. 580, §9 (NEW).]

D. If the commissioner recommends changes to the agreement, the commissioner shall:

(1) Send the agreement back to the withdrawal committee for necessary corrections;

(2) Establish a maximum time within which to make the

corrections; and

(3) Indicate that the corrected agreement must be returned to the commissioner for conditional approval before it goes to public hearing as set forth in paragraph C. [2009, c. 580, §9 (NEW).]

[2009, c. 580, §9 (NEW) .]

5. Date of municipal election; notice; warrant; polling hours. The date and time for voting is as set forth in this subsection.

A. The commissioner shall determine the date upon which the voters of the petitioning municipality must vote upon the agreement submitted to them. The election must be held as soon as practicable, and the commissioner shall attempt to set the date of the vote to coincide with a statewide election. [2009, c. 580, §9 (NEW).]

B. At least 35 days before the date set in paragraph A, the commissioner shall give written notice of the date by registered or certified mail to the town clerk or city clerk of the municipality petitioning to withdraw. [2009, c. 580, §9 (NEW).]

C. The town clerk or city clerk shall immediately notify the municipal officers upon receipt of the notice under paragraph B, and the municipal officers shall meet and immediately issue a warrant for a special town meeting or city election, as the case may be, to be held on the date designated by the commissioner. No other date may be used. [2009, c. 580, §9 (NEW).]

D. In a warrant under paragraph C, the municipal officers shall direct that the polls are to be open at 10 a.m. and remain open until 8 p.m. [2009, c. 580, §9 (NEW).]

[2009, c. 580, §9 (NEW) .]

6. Public hearing; voting procedures. The following requirements apply to the voting procedures.

A. At least 10 days before the election, the municipal officers shall hold a posted or otherwise advertised public hearing on the withdrawal question. [2009, c. 580, §9 (NEW).]

B. Except as otherwise provided in this section, the voting at the meeting held in a town must be conducted in accordance with Title 30-A, sections 2528 and 2529, even if the town has not accepted the provisions of Title 30-A, section 2528. [2009, c. 580, §9 (NEW).]

C. The voting at the meeting held in a city must be conducted in accordance with Title 21-A. [2009, c. 580, §9 (NEW).]

[2009, c. 580, §9 (NEW) .]

7. Article. The article to be voted on must be in the following form.

"Article: Do you favor the withdrawal of the (name of municipality) from the regional school unit (name of regional school unit) subject to the terms and conditions of the withdrawal agreement dated (insert date)?

Yes No"

[2009, c. 580, §9 (NEW) .]

8. Ballots; posting of agreement. The withdrawal agreement need not be printed on the ballot. Copies of the agreement must be posted in the municipality in the same manner as specimen ballots are posted under Title 30-A, section 2528.

[2009, c. 580, §9 (NEW) .]

9. Required vote. A 2/3 vote of those casting valid votes in the municipality is required before the municipality may withdraw from the regional school unit.

[2009, c. 580, §9 (NEW) .]

10. Restriction on withdrawal petitions. A municipality within a regional school unit may not petition for withdrawal within 2 years after the date of:

A. A municipal vote on a petition for withdrawal if the petition received less than 45% of the votes cast; or [2009, c. 580, §9 (NEW).]

B. A municipal vote on a withdrawal agreement if the agreement received less than 60% of the votes cast. [2009, c. 580, §9 (NEW).]

[2009, c. 580, §9 (NEW) .]

11. Cost of advisors. The expense of employing competent advisors by the municipality petitioning to withdraw must be borne by the municipality, and the expense of employing competent advisors by the regional school unit must be borne by the regional school unit with the municipality bearing its share according to the regional school unit's cost-sharing agreement.

[2009, c. 580, §9 (NEW) .]

12. Determination of vote. The town clerk or city clerk shall, within 24 hours of determination of the result of the vote in the municipality, certify the total number of votes cast in the affirmative and the total number of votes cast in the negative on the article to the commissioner.

[2009, c. 580, §9 (NEW) .]

13. Determination of results; execution of agreement. If the commissioner finds that a 2/3 majority of the voters voting on the article have voted in the affirmative, the commissioner shall notify the municipal officers and the regional school unit board to take steps for the withdrawal in accordance with the terms of the agreement for

withdrawal.

[2009, c. 580, §9 (NEW) .]

14. Recount; checklists and ballots; disputed ballots. This subsection applies to recounts, checklists, ballots and disputed ballots.

A. If, within 7 days of the computation and recording of the results of the voting, the municipality requests to the commissioner in writing a recount of the votes, the commissioner shall immediately cause the checklists and all the ballots cast in the municipality to be collected and kept at the commissioner's office so they may be recounted by the municipality. [2009, c. 580, §9 (NEW).]

B. The town clerk or city clerk of the municipality is authorized to deliver the checklists and ballots to the commissioner, notwithstanding any other provision of law to the contrary. [2009, c. 580, §9 (NEW).]

C. The commissioner shall resolve any question with regard to disputed ballots. [2009, c. 580, §9 (NEW).]

[2009, c. 580, §9 (NEW) .]

15. Execution of agreement; certified record; certificate of withdrawal. When the agreement for withdrawal has been put into effect by the municipality, the municipal officers shall notify the commissioner by certified mail that the agreement of withdrawal has been executed. A complete certified record of the transaction involved in the withdrawal must be filed with the commissioner. The commissioner shall immediately issue a certificate of withdrawal to be sent by certified mail for filing with the regional school unit board and shall file a copy in the office of the Secretary of State.

[2009, c. 580, §9 (NEW) .]

16. Indebtedness. This subsection applies to outstanding indebtedness.

A. Whenever a municipality withdraws from a regional school unit having outstanding indebtedness, the regional school unit remains intact for the purpose of securing and retiring the indebtedness. The withdrawal agreement may provide for alternate means for retiring outstanding indebtedness. [2009, c. 580, §9 (NEW).]

B. For the purposes of this subsection, "outstanding indebtedness" means bonds or notes issued or assumed by the regional school unit board and lease-purchase agreements issued or assumed by the regional school unit, but does not include any indebtedness of the withdrawing municipality assumed by the regional school unit at the time of formation. [2009, c. 580, §9 (NEW).]

[2009, c. 580, §9 (NEW) .]

17. General purpose aid. When a municipality withdraws from

a regional school unit, the general purpose aid for the municipality must be computed in accordance with chapter 606-B.

[2009, c. 580, §9 (NEW) .]

18. Committee recall. If the commissioner determines that the withdrawal committee has failed to comply with the requirements of this section, the commissioner may authorize the municipal officers to appoint new representatives to the withdrawal committee.

[2009, c. 580, §9 (NEW) .]

19. Transfer of property. The regional school unit board may negotiate with the withdrawal committee regarding an equitable division of the regional school unit's property between the regional school unit and the municipality represented by the withdrawal committee and transfer title of the property to the municipality following withdrawal. The regional school unit board shall determine that the regional school unit's educational program will not be disrupted solely because of the transfer of any given property before it may complete the transfer.

[2009, c. 580, §9 (NEW) .]

20. (TEXT EFFECTIVE UNTIL 7/1/12) **Reorganization; penalties.** A municipality that withdraws from a regional school unit under this section is not subject to penalties applicable to a nonconforming school administrative unit under section 15696 for 2 years after withdrawing from the regional school unit. A municipality that does not join a conforming school administrative unit within 2 years of withdrawal is subject to the penalties applicable to a nonconforming school administrative unit under section 15696. The remaining municipality or municipalities within the regional school unit from which the municipality withdraws are not subject to penalties applicable to a nonconforming school administrative unit under section 15696 for 2 years after the withdrawal of the municipality.

[2009, c. 580, §9 (NEW) .]

20. (TEXT REPEALED 7/1/12) **Reorganization; penalties.**

[2011, c. 251, §12 (AFF); 2011, c. 251, §7 (RP) .]

SECTION HISTORY
2009, c. 580, §9 (NEW). 2011, c. 251, §12 (AFF). 2011, c. 251, §7 (AMD). 2011, c. 328, §1 (AMD). 2011, c. 328, §2 (AFF).

Data for this page extracted on 02/01/2012 10:02:31.

The Revisor's Office cannot provide legal advice or interpretation of Maine law to the public.
If you need legal advice, please consult a qualified attorney.
Office of the Revisor of Statutes
7 State House Station
State House Room 108

Augusta, Maine 04333-0007

8A

Office of Assessors' Agent

March 27, 2012

To: Board of Assessors
Laurie Smith, Town Manager
Shari Fredette, Treasurer/Tax Collector

From: Sue Varney
Assessors' Agent

Our State Audit was performed recently and during that process it was discovered that an error was made in the reporting of the Business Equipment Tax Exemption (BETE) personal property in the TIF district. The error was made due to the way Trio reports the information that I supply to the State. BETE personal property in a TIF district continues to be very difficult for the town, as well as the State, to implement.

Attached please find a copy of a document to be submitted to Maine Revenue Services as well as included in the 2011/2012 commitment and valuation books regarding the corrected TIF Business Equipment Tax Exemption (BETE) amounts and changes in overlay. Also attached is a copy of the corrected Commitment Certification, Tax Calculation form, and both the original and revised TIF calculation breakdown sheets for your use and information.

The amount of the TIF tax should have been $68,086.24, which reduces the overlay by $17,064.37 to $35,801.03. As you will see on the attached TIF calculation breakdown sheet the net result of this correction is an additional $6,340.27 to Debt Service and an additional $3,790.53 to Economic Development as well as an additional $275.43 to the General Fund. If this document was not signed the 2013 State Valuation would be $1,126,361 higher.

The law states that the person who created the original document is the person who signs the Affidavit Correcting Local Government Record form. I would like to request that the Board of Assessors vote at the April 3, 2012 meeting for me to forward the signed document to Maine Revenue Service.

Thank you for your assistance with this matter.

Enclosures

Office of the Assessors' Agent • Town of Wiscasset • 51 Bath Road • Wiscasset, Maine 04578
(p) 207-882-8200 Ext. 101 • (f) 207-882-8228 assessor@wiscasset.org

COPY

AFFIDAVIT CORRECTING LOCAL GOVERNMENT RECORD
(5 M.R.S.A. § 95-B)

~~City~~/Town of Wiscasset

NOW COMES Susan M. Varney [name], who, being duly sworn, deposes and says as follows:

1. I am the Assessors' Agent [position] of the ~~City~~/Town of Wiscasset

2. I am responsible for the preparation of Municipal Tax Commitment [name of record], which is a local government record within the scope of 5 M.R.S.A. § 95 et seq.

3. On or about Sept. 6, 2011 [date] I prepared a Municipal Tax Commitment [record] and it has come to my attention that said record contains an error/omission, specifically: [identify the error/omission and briefly explain how it occurred].

   Error in TIF Financing Plan Amount

4. The record should properly state $68,086.24 [state correct information].

5. I make this affidavit in order to correct the error or omission identified above.

Date: 3/20/2012

Susan M. Varney
(Signature)

Susan M. Varney
(Printed name)

STATE OF MAINE
Lincoln [COUNTY], ss.

Personally appeared before me the above-named Susan M. Varney, who swore that the facts recited in the foregoing affidavit are true of his/her own knowledge or were stated to be on information and belief he/she has such information and believes it to be true and reliable; and who executed the same in my presence.

Date: 3/20/2012

Christine L. Wolfe
(Notary Public/~~Attorney~~)

(SEAL)

MY COMMISSION EXPIRES:
April 6, 2013
(Printed name)
Christine L. Wolfe

ASSESSORS' CERTIFICATION OF ASSESSMENT

COPY

WE HEREBY CERTIFY, that the pages herein, numbered from to inclusive, contain a list and valuation of Estates, Real and Personal, liable to be taxed in the Municipality of WISCASSET for State, County, District, and Municipal Taxes for the fiscal year 07/01/2011 to 06/30/2012 as they existed on the first day of April 2011.

IN WITNESS THEREOF, we have hereunto set our hands at WISCASSET this 6 day of September, 2011.

Judith R. Colby
Willie J. [illegible]
David [illegible]
Pamela [illegible]
Edward J. [illegible]

Municipal Assessor(s)

MUNICIPAL TAX ASSESSMENT WARRANT

State of Maine Municipality WISCASSET County Lincoln

To James H. George , Tax Collector

In the name of the State of Maine you are hereby required to collect of each person named in the list herewith committed to you the amount set down on said list as payable by that person.

Assessments:

1.	County Tax	491,658.00	
2.	Municipal Appropriation	4,908,586.00	
3.	TIF Financing Plan Amount	~~51,021.87~~ 68,086.24	
4.	Local Educational Appropriation	4,849,627.00	
5.	Overlay (Not to Exceed 5% of "Net To Be Raised" (see tax rate calculation #16)	~~52,865.40~~ 35,801.03	
6.	**Total Assessments**		10,353,758.27

Deductions:

7.	State Municipal Revenue Sharing	260,000.00	
8.	Homestead Reimbursement	72,677.58	
9.	BETE Reimbursement	12,031.37	
10.	Other Revenue	3,218,989.00	
11.	**Total Deductions**		3,563,697.95
12.	**Net Assessment for Commitment**		6,790,060.32

COPY

CERTIFICATE OF ASSESSMENT TO BE RETURNED TO MUNICIPAL TREASURER
STATE OF MAINE

County Lincoln , ss.

We hereby certify, that we have assessed a tax on the estate, real and personal liable to be taxed in the Municipality of WISCASSET for the fiscal year 07/01/2011 to 06/30/2012, at 15.15 mils on the dollar, on a total taxable valuation of $448,188,800

Assessments:

1.	County Tax	491,658.00	
2.	Municipal Appropriation	4,908,586.00	
3.	TIF Financing Plan Amount	~~51,021.87~~ 68,086.24	
4.	Local Educational Appropriation	4,849,627.00	
5.	Overlay (Not to Exceed 5% of "Net To Be Raised" (see tax rate calculation #16)	~~52,865.40~~ 35,801.03	
6.	**Total Assessments**		10,353,758.27

Deductions:

7.	State Municipal Revenue Sharing	260,000.00	
8.	Homestead Reimbursement	72,677.58	
9.	BETE Reimbursement	12,031.37	
10.	Other Revenue	3,218,989.00	
11.	**Total Deductions**		3,563,697.95
12.	**Net Assessment for Commitment**		6,790,060.32

Lists of all the same we have committed to James H. George, Tax Collector of said Municipality, with warrants in due form of law for collecting and paying the same to James H. George, Municipal Treasurer of said Municipality, or the successor in office, on or before such date, or dates, as provided by legal vote of the Municipality and warrants received pursuant to the laws of the State of Maine. (Title 36 MRSA, section 712)

Given under our hands this 09/06/2011

Municipal Assessor(s)

Complete in Duplicate. File original with Tax Collector. File copy in Valuation Book

2011 MUNICIPAL TAX RATE CALCULATION STANDARD FORM

COPY

Municipality: Wiscasset with TIF Value

District 1 District 2

BE SURE TO COMPLETE THIS FORM BEFORE FILLING IN THE TAX ASSESSMENT WARRANT

1. Local Taxable Real Estate Valuation	1	$441,595,400 (should agree with Page 1, line 6)		1,972,901	471,320
2. Local Taxable Personal Property Valuation	2	$6,593,400 (should agree with Page 1, line 10)		1,399,400	
3. Total Taxable Valuation (Line 1 plus line 2)			3	$448,188,800 (should agree with Page 1, line 11)	
4. (a) Total of all **Homestead Exempt Valuation**	4(a)	$9,594,400 (should agree with Page 1, line 14f)			
(b) **Homestead Exempt Reimbursement** Value	4(b)	$4,797,200 (line 4(a) divided by 2)			
5. (a) Total of all **BETE Exempt Valuation**	5(a)	$1,134,500 (should agree with Page 2, line 15a)		650,520	9,855.38
(b) Statutory standard reimbursement value for 2011 is **70%**	5(b)	$794,150 (line 5(a) multiplied by 0.7)			

**** For municipalities requesting Enhanced BETE Reimbursement, please contact MRS for Enhanced Tax Rate Calculator Form**

6. Total Valuation Base (Line 3 plus line 4(b) plus line 5(b))			6	$453,780,150
ASSESSMENTS				
7. County Tax	7	491,658.00		
8. Municipal Appropriation	8	4,908,586.00		
9. TIF Financing Plan Amount	9	68,086.24		$4,494,141.00
10. Local Education Appropriation **(Local Share/Contribution)** (Adjusted to Municipal Fiscal Year)	10	4,849,627.00		
11. Total Assessments (Add lines 7 through 10)			11	$10,317,957.24
ALLOWABLE DEDUCTIONS				
12. State Municipal Revenue Sharing	12	260,000.00		
13. Other Revenues: (All other revenues that have been formally appropriated to be used to reduce the commitment such as excise tax revenue, tree growth reimbursement, trust fund or bank interest income, appropriated surplus revenue, etc... **(Do Not Include any Homestead or BETE Reimbursement)**	13	3,218,989.00		
14. Total Deductions (Line 12 plus line 13)			14	$3,478,989.00
15. Net to be raised by local property tax rate (Line 11 minus line 14)			15	$6,838,968.24

16.	$6,838,968.24 (Amount from line 15)	x	1.05	=	$7,180,916.65	Maximum Allowable Tax
17.	$6,838,968.24 (Amount from line 15)	÷	$453,780,150 (Amount from line 6)	=	0.01507	Minimum Tax Rate
18.	$7,180,916.65 (Amount from line 16)	÷	$453,780,150 (Amount from line 6)	=	0.01582	Maximum Tax Rate
19.	$448,188,800.00 (Amount from line 3)	x	0.01515 (Selected Rate)	=	$6,790,060.32 (Enter on Page 1, line 13)	Tax for Commitment
20.	$6,838,968.24 (Amount from line 15)	x	0.05	=	$341,948.41	Maximum Overlay
21.	$4,797,200 (Amount from line 4b)	x	0.01515 (Selected Rate)	=	$72,677.58 (Enter on line 8, Assessment Warrant)	**Homestead Reimbursement**
22.	$794,150 (Amount from line 5b)	x	0.01515 (Selected Rate)	=	$12,031.37 (Enter on line 9, Assessment Warrant)	**BETE Reimbursement**
23.	$6,874,769.27 (Line 19 plus lines 21 and 22)	-	$6,838,968.24 (Amount from line 15)	=	$35,801.04 (Enter on line 5, Assessment Warrant)	Overlay

(If Line 23 exceeds Line 20 select a lower tax rate.)

Results from this completed form should be used to prepare the Municipal Tax Assessment Warrant, Certificate of Assessment to Municipal Treasurer and Municipal Valuation Return.

For 2011-2012 Taxes

Tax Increment Financing (TIF) Calculation Breakdown

COPY

Original

District 1 (Rynel Lot) 100% Sheltered

	Valuation						
	Land	Building	Personal	Subtotal	Mill Rate	TIF Tax	BETE value has been subtracted
Map R-8 Lot 6/2	346,320	1,667,100	398,600	2,412,020			
2004 Base Value				40,519			
Total Captured Assessed Value				2,371,501	0.01515	35,928.24	

Note: Rynel owns personal prop.

District 2 (3 Lots) 50% Sheltered

	Valuation					
	Land	Building	Personal	Subtotal	Mill Rate	TIF Tax
Map R-8 Lot 6/1 (CMP lot)	53,100	772,500	0	825,600		
Map R-8 Lot 6/3	48,100	0	0	48,100		
Map R-8 Lot 6/4	54,900	0	0	54,900		
Subtotal				928,600		
2004 Base Value (3 lots)				22,320		
Total Captured Assessed Value				906,280	0.01515	13,730.14
50% Sheltered Valuation				453,140	0.01515	6,865.07

Total Valuation Base (TVB): *Line 6 of Tax Rate Calculation Form*	453,934,100
Minus Sheltered TIF Valuation (STV)	2,824,641
Total Taxable Val. minus Sheltered Val. (TTV-STV)	451,109,459
Net Commitment Before TIF (line 15 on TRC Form w/o Line 9)	6,901,819

TIF District 1 Funding Split

Rynel Lot (35%)	* Debt Service (40%)	Econ. Dev. (25%)
12,574.88	14,371.30	8,982.06

This is 50% of the sheltered tax

TIF District 2 Funding Split

Debt Service (50%)	General Fund (50%)
6,865.07	6,865.07

TIF District 1 Sheltered Tax	35,928.24
TIF District 2 ShelteredTax	6,865.07
BETE exempt value within TIF * 65% retained	8,228.56
TIF Financing Plan Amount to put on Line 9 on Tax Rate Calc. Form	51,021.87

Total Funding for Debt Service

21,236.37

* = Debt Service for $937,500 original principal balance on infrastructure G.O. bond to be paid by TIF District 1 debt service split (40%) and District 2 debt service split (25%). Any remaining balance to be paid by Ferry Road Development Co, LLC.

09/02/2011 3:34 PM
t:/tax increment financing

For 2011-2012 Taxes

Tax Increment Financing (TIF) Calculation Breakdown

COPY

REVISED 3/20/2012

District 1 (Rynel Lot) 100% Sheltered

	Valuation						
	Land	Building	Personal	Subtotal	Mill Rate	TIF Tax	
Map R-8 Lot 6/2	346,320	1,667,100	1,399,400	3,412,820	-		BETE value has been subtracted
2004 Base Value				40,519			
Total Captured Assessed Value				**3,372,301**	**0.01515**	**51,090.36**	
Note: Rynel owns personal prop.							

Revised 3/20/12

District 2 (3 Lots) 50% Sheltered

	Valuation					
	Land	Building	Personal	Subtotal	Mill Rate	TIF Tax
Map R-8 Lot 6/1 (CMP lot)	53,100	772,500	36,360	861,960		
Map R-8 Lot 6/3	48,100	0	0	48,100		
Map R-8 Lot 6/4	54,900	0	0	54,900		
Subtotal				964,960		
2004 Base Value (3 lots)				22,320		
Total Captured Assessed Value				**942,640**	**0.01515**	**14,281.00**
50% Sheltered Valuation				**471,320**	**0.01515**	**7,140.50**

Total Valuation Base (TVB): *Line 6 of Tax Rate Calculation Form*	453,780,150
Minus Sheltered TIF Valuation (STV)	3,843,621
Total Taxable Val. minus Sheltered Val. (TTV-STV)	449,936,529
Net Commitment Before TIF (line 15 on TRC Form w/o Line 9)	6,770,882

TIF District 1 Funding Split

Rynel Lot (35%)	* Debt Service (40%)	Econ. Dev. (25%)
17,881.63	20,436.14	12,772.59

This is 50% of the sheltered tax

TIF District 2 Funding Split

Debt Service (50%)	General Fund (50%)
7,140.50	7,140.50

TIF District 1 Sheltered Tax	51,090.36
TIF District 2 ShelteredTax	7,140.50
BETE exempt value within TIF * 65% retained	9,855.38
TIF Financing Plan Amount to put on Line 9 on Tax Rate Calc. Form	**68,086.24**

Total Funding for Debt Service

27,576.64

*** = Debt Service for $937,500 original principal balance on infrastructure G.O. bond to be paid by TIF District 1 debt service split (40%) and District 2 debt service split (50%). Any remaining balance to be paid by Ferry Road Development Co, LLC.**

09/02/2011 3:34 PM
t:/tax increment financing

10 A

AGREEMENT FOR CONVEYANCE OF REAL PROPERTY

THIS AGREEMENT FOR THE CONVEYANCE OF REAL PROPERTY (the "Agreement") is made between CENTRAL MAINE POWER COMPANY, a Maine corporation with a mailing address of 83 Edison Drive, Augusta, 04336 ("CMP") and **THE INHABITANTS OF THE TOWN OF WISCASSET**, a body politic with a mailing address of 41 Bath Road, Wiscasset, Maine 04578 ("Town"). The date that this Agreement has been fully executed shall be termed the "Effective Date".

Whereas CMP owns certain lands located in the Town of Wiscasset, Lincoln County and the Town of Woolwich, Sagadahoc County, Maine, being more particularly described in Exhibit A below; and

Whereas CMP desires to convey such lands to the Town pursuant to requirements of State of Maine Department of Environmental Protection Site Location of Development Act and Natural Resources Protection Act Orders, Project Number #L-24620-26-A-N/L-24620-TG-B-N/L-24620-VP-C-N/L-24620-IW-D-N/L-24620-L6-E-N and U.S. Army Corps of Engineers Permit Number #NAE-2008-03017 (the "Orders") relating to preservation of an approximately 22 acre parcel of land southerly of Bradford Road, Wiscasset, Maine now or formerly known as the Montsweag Brook Parcel.

Whereas the Town desires to accept such lands pursuant to stipulations contained in the Orders and in a Declaration of Covenants and Restrictions dated August 5, 2010 and recorded in the Lincoln County Registry of Deeds in Book 4304, Page 54 and the Sagadahoc County Registry of Deeds in Book 3212, Page 136 and as revised _____, 2012 and recorded in said Registries respectively in Book , Page _____ and Book _____, Page _____.

Now Therefore, in consideration of the mutual covenants, agreements and promises of the parties, the adequacy of which is acknowledged, CMP agrees to convey and the Town agrees to accept the land and all improvements thereon described on Exhibit A, attached hereto or incorporated herein, (the "Land"), together with any, improvements on the Land or attached thereto and all rights, privileges, easements and appurtenances thereto, including without limitation, CMP's right, title and interest in and to all air rights, and any easements, rights-of-way or other interests in, on, under or to any, highway, street or right-of-way abutting or adjoining the Land, together with the flowage easements described in Exhibit B, attached hereto or incorporated herein, collectively with the Land, the "Property".

1. Inspection Contingency.

(a) During the term of this Agreement, the Town may, upon reasonable notice to CMP and at the Town's sole cost, expense and risk, examine, investigate and inspect the Property to obtain any and all information that the Town deems appropriate regarding the property, including, without limitation, operating information, environmental conditions, physical nature and condition of the Property.

(b) CMP will provide to the Town, at no cost to the Town, copies of any of CMP's plans, surveys, environmental reports, title report, inspections and/or maintenance records of the Property ("CMP's Information"). CMP makes no representation or warranty regarding the accuracy or completeness of CMP's Information.

(c) CMP will pay the reasonable costs of the Town's legal expenses not to exceed Two thousand ($2,000.00) Dollars.

2. Closing of Conveyance. Delivery of the deed to the Town and acceptance of the deed by the Town (the "Closing") shall occur prior to December 1, 2012 (the "Closing Date"). The precise Closing Date and time shall be mutually agreed upon by CMP and the Town, and the Closing shall take place at a location mutually agreed upon by CMP and the Town.

3. Title and Survey.

(a) CMP shall convey the Property to the Town by good and sufficient Quit Claim with Covenant deed (the "Deed"). Title to the Property shall be good and marketable subject only to zoning restrictions, and such taxes for the current tax year as are not due and payable as of the date of Closing and to any defects of title accepted by the Town.

(b) CMP has performed certain survey work on the Property, a plan of which is recorded in the Lincoln County Registry of Deeds in Plan Book 95, Page 63 and in the Sagadahoc County Registry of Deeds in Plan Book 47, Page 26.. The survey work includes the following:

(i) a recordable plan (the "Plan") showing all property lines and monuments that define the Land, retained land of CMP, easements benefiting the Land, the locations of public and private roads, and the locations of reserved or excepted easements on the Land; and

(ii) marking of property lines (blaze and paint).

4. Stewardship Funds. CMP will provide One hundred thousand ($100,000) Dollars of dedicated funds to the Town to be used for fulfilling stewardship and monitoring obligations.

5. Closing Procedure. The parties shall exchange the following funds and documents on or prior to the Closing Date:

(a) **CMP's Deposits:** The Deed, a FIRPTA affidavit, an underground storage tank notification, an appropriate Maine residency form, a settlement statement and such other documents as may be reasonably necessary or customary to effectuate the Closing.

(b) **Town's Deposits:** Acceptance of the deed pursuant to this Agreement and such other documents as may be reasonably necessary or customary to effectuate the Closing.

6. Prorations and Adjustments.

(a) **Prorated Items.** Property taxes shall be prorated on an as-due basis as of the day of Closing.

(b) **Town's Costs.** The Town shall pay no other costs associated with this sale, except as provided in part (d) below.

(c) **CMP's Costs.** CMP shall pay for 100% of transfer taxes payable upon recordation, the cost of any surveys required by CMP, the cost of all title insurance required by CMP, and all recording costs.

(d) Except as provide in 1(c.), above, each party shall be responsible for its own internal costs related to the transaction.

The provisions of this Section shall survive closing.

7. Default. In the event either party shall default on any of its obligations herein, the non-defaulting party may seek to employ any and all available legal and equitable remedies. If either party seeks specific performance, that claim shall be brought in the Maine Superior Court. Claims for any other remedy for a default under this Agreement shall be decided by binding arbitration before a single arbitrator selected by the parties. In the event that the parties are unable to agree on an arbitrator within 30 days of a request for appointment of an arbitrator by one party, the party seeking arbitration may submit the arbitration demand to the American Arbitration Association ("AAA") for resolution by a single arbitrator. If court proceedings or arbitration are initiated by either party with respect to this Agreement, the reasonable attorneys' fees of the prevailing party, and all costs of arbitration, if applicable, shall be paid by the non-prevailing party.

8. Brokers / Commissions. There are no listings or cooperating brokers involved in this transaction. CMP is a licensed real estate brokerage agency and employs licensed real estate brokers either directly or a contractors. However, there are no fees or commissions due in connection with this transaction. Each party hereto agrees to hold the other party harmless from and against any and all costs, expenses, claims, losses, or damages, including reasonable attorney's fees, resulting from a violation of their respective representation set forth in this Section. The provisions of this Section shall survive the Closing.

9. Notices. All required notices shall be given in writing, mailed postage prepaid, by certified or registered mail, return receipt requested, by nationally recognized overnight air courier service, by personal delivery or by electronic facsimile to the addresses indicated below, or such other places as the parties may designate in writing to one another:

CMP:
Central Maine Power Company
83 Edison Drive
Augusta, Maine 04336
Attention: Alice Richards
Real Estate Services
Email: alice.richards@cmpco.com
Tel. No.: (207) 626-9817

Town of Wiscasset~~Chewonki~~:
Town of Wiscasset
51 Bath Road
Wiscasset, Maine 04578
Attn: Town Manager

Email: townmanager@wiscasset.org
Tel. No.: (207)-882-8200 extension 108

Formatted: Underline

10. Time. Time is of the essence in this Agreement. In any case where a date for performance by either party shall fall on a Saturday, Sunday or holiday, the time for performance shall automatically extend to the next regular business day.

11. Governing Law.

This Agreement shall be governed by and construed in accordance with the laws of the State of Maine.

12. Entire Agreement.

This Agreement (including exhibits) constitutes the entire agreement between the parties with respect to this transaction. This Agreement may not be changed or modified except by instrument in writing signed by the parties.

13. Bind and Inure, Risk of Loss.

The terms, covenants and conditions herein shall bind and inure to the benefit of the successors and assigns of the parties. All risk of loss to the Property prior to the Closing shall be on CMP.

14. No Assignment.

Neither party may assign its rights in and to this Agreement without the prior written consent of the other party, except to affiliates of CMP and the Town, respectively and, furthermore, it is agreed and understood that any merger of CMP or the Town with another company or agency shall not be considered an assignment.

15. Severability.

If any section, clause or part of this Agreement is found unenforceable, the finding shall not affect the remainder of this Agreement.

16. Headings.

Section headings are solely for means of reference and are not intended to modify, explain or place any construction on any of the provisions of this Agreement.

17. Authority of Parties.

The Town and CMP represent, warrant and covenant to each other that they have the full power and authority to perform and comply with the execution and delivery of this Agreement. Further, the persons executing this Agreement on behalf of the Town and CMP each hereby represent and warrant that he or she has the requisite and necessary authority to execute this Agreement on behalf of such party.

18. No Representations or Warranties Outside Agreement.

This Agreement is the entire Agreement of the parties, and CMP agrees that neither CMP nor its representatives has made any representation regarding the subject matter of this sale, including representations as to the physical nature or condition of the land, the improvements, the fixtures

or appurtenances annexed thereto, or the personal property, if any, to be transferred to the Town, except as expressly stated in this Agreement. Furthermore, CMP and the Town each agree that in performing under this Agreement, each has not and shall not rely upon any statement or information from anyone claiming to represent the other party hereto, and the other party hereto is not and shall not be liable or bound by any such statement and/or information.

19. Representations or Warranties. CMP represents and warrants to the Town that the following are true as of the date of this Agreement and will be true as of the Closing:

(i) CMP has no actual knowledge of the existence of any material violations of laws or regulations affecting the Property. CMP has not received any notice from any federal, state or local governmental authority or representative thereof claiming or inquiring into the existence of any such violation.

(ii) There is no action, suit, legal proceeding or other proceeding pending or threatened (or, to the best knowledge of CMP, any basis therefore) against CMP of affecting any portion of the Property in any court or before any arbitrator of any kind or before any governmental body that may materially or adversely affect the transactions contemplated by this Agreement or which may affect any portion of the Property.

(iii) CMP has not knowingly released or disposed of any "Hazardous Substance" (as defined below) on, in or from the Property and CMP is, to the best of its knowledge, not aware of the release or disposal of any Hazardous Substance on, in or from the Property at any time by anyone else. The term "Hazardous Substance" as used herein means any material, the generation, storage, handling, release, transportation or disposal of which is regulated by any federal, state or local law or regulation. CMP will remove and properly dispose of any hazardous substance found on the Land prior to closing.

(iv) CMP has no actual knowledge of any pending or threatened actions or proceeding regarding condemnation of the Property or any part thereof.

(v) CMP has good and marketable title to the Property, free and clear of all liens and encumbrances.

20. Use of Retained Lands. The deed of conveyance from CMP to the Inhabitants of the Town of Wiscasset will~~The Town~~ acknowledges that CMP is an electric utility company and may have need to use any of the retained lands for utility purposes including, but not limited to, the construction and operation and maintenance of overhead electric transmission lines, substations and appurtenant facilities. ~~The Town, for itself and its successors and assigns, covenants and agrees with CMP that this conveyance shall not be the basis for objecting to any future proposal by CMP to use its retained lands for such purposes. The provisions of this Section shall survive Closing.~~

21. Approval by the Inhabitants of the Town of Wiscasset. This Contract is contingent upon Wiscasset's town voters approving, at a public meeting to be held on or before July 1, 2012, the

Formatted: Font: Bold

acceptance by the Town from CMP of both a Deed to the property as described and as encumbered as set out in this Agreement, and $100,000.00 of dedicated funds to be used by the Town for fulfilling stewardship and monitoring obligations with regard to the property. This Contract is also contingent upon the Wiscasset Board of Selectmen being satisfied with the results of any physical examination of the land and dam to be conveyed, and upon an examination of CMP's title to the premises; should they not be satisfied for any reason then they may declare this Contract null and void and neither Party shall have any further obligation to the other Party.

IN WITNESS WHEREOF, the parties hereto have executed this Agreement on the dates immediately following their signatures.

CENTRAL MAINE POWER COMPANY TIN # 01-0042740

By:_____
Its:

Dated: _____

The Inhabitants of the Town of Wiscasset

~~By~~_____
Laurie Smith
Its: Town Manager

EXHIBIT A

Exhibit A-1 Conveyed Lands
Subject to the reservations and exceptions as defined in Exhibit A-2, below, the following parcel of land:

Parcel - Montsweag Brook, Wiscasset – Beginning at the intersection of the northerly sideline of Central Maine Power Co. transmission line Section 81, said sideline being 150 feet Northerly, as measured at right angles, of the centerline of Section 81 as it exists in 2010 (the "Section 81 North Sideline"), and the southerly sideline of lands of Merwin Alexander Delano, III as described in a deed recorded in the Lincoln County Registry of Deeds in Book 3881, Page 164, at a capped iron rod set at the base of a horizontal cedar post;

Thence S 85° 38' 26" W along the Section 81 North Sideline, crossing over Montsweag Brook and into the Town of Woolwich, Sagadahoc County, a distance of 1154.98 feet to land now or formerly of Shirley Titcomb as described in a deed recorded in the Sagadahoc County Registry of Deeds in Book 511, Page 170;

Thence N 07° 12' 53" E along land of said Titcomb a distance of 464.96 feet to a capped iron rod set;

Thence S 81° 10' 36" E along land of said Titcomb a distance of 111.00 feet to a capped iron rod set, said iron rod being one rod distant westerly measured at right angles from a point on the contour line at an elevation of 125 feet, as determined from the top of the easterly retaining wall of Central Maine Power Company's Montsweag Dam, which retaining wall was established at an elevation of 116 feet U.S.G.S. Datum;

Thence extending in a generally northerly direction along land of said Titcomb, said line being a meandering line parallel with and one rod distant westerly of said 125-foot contour line, a distance of 650 feet more or less to the easterly sideline of Central Maine Power Company transmission line Section 392, said sideline being 185 feet easterly, as measured at a right angle from the centerline of Section 392 as it exists in 2012 (the "Section 392 East Sideline");

Thence N 36° 30' 05" E along the Section 392 East Sideline and crossing into the Town of Wiscasset, Lincoln County, a distance of 1578.75 feet to a capped iron rod set at other land of Central Maine Power Company;

Thence S 82° 15' 43" E along other land of Central Maine Power Company described in a deed recorded in the Lincoln County Registry of Deeds in Book 662, Page 86, a distance of 171 feet more or less to the centerline of Montsweag Brook;

Thence Southerly along said centerline and land now or formerly of Richard W. Hanson as described in a deed recorded in the Lincoln County Registry of Deeds in Book 594, Page 155, a distance of 259 feet more or less;

Thence S 57° 11' 25" E along said land of Hanson 241 feet more or less to land now or formerly of Merwin Alexander Delano, III; at a cedar post found standing, said post being one rod distant southeasterly measured at right angles from a point on the contour line at an elevation of 125 feet, as determined from the top of the easterly retaining wall of Central Maine Power Company's Montsweag Dam, which retaining wall was established at an elevation of 116 feet U.S.G.S. Datum;

Thence extending in a general southwesterly direction along said land of Delano, said line being a meandering line parallel with and one rod distant easterly of said 125-foot contour line, a distance of 2,300 feet more or less to a capped iron rod set at the base of a cedar post found, the tie line between the afore mentioned found cedar post and said capped iron rod being a distance of 1880.47 feet on a bearing of S °29 10' 17" W;

Thence S 64° 45' 24" E along said land of Delano a distance of 631.41 feet to the Section 81 North Sideline and the point of beginning, containing 22 acres more or less.

All bearings are based on UTM Zone 19 North.

For reference, see a plan titled "Boundary Survey of Bradford Road, Wiscasset, Maine" by Owen Haskell, Inc. recorded in the Lincoln County Registry of Deeds in Plan Book 95, Page 63 and the Sagadahoc County Registry of Deeds in Plan Book 47, Page 26.

Exhibit A2 Reservations and Exceptions

Excepting and reserving from the above the following lands, rights and easements:

Excepting from this conveyance and reserving to Central Maine Power Company, its successors and assigns, the right and easement at all times to enter the conveyed premises adjacent to the retained land of Central Maine Power Company located southerly and westerly of the herein conveyed premises, for the purpose of cutting or trimming and removing such tall tree or trees as in falling would in the judgment of Central Maine Power Company, its successors and assigns, interfere with or endanger the operation and maintenance of any electric transmission lines existing or constructed on said retained lands.

The Property is subject to a Declaration of Restrictions dated August X, 2010 and recorded in the Lincoln County Registry of Deeds in Book 4304, Page 54, and in the Sagadahoc County Registry of Deeds in Book 3212 Page 136 and as revised _____, 2012 and recorded in said Registries respectively in Book _____, Page _____ and Book _____, Page _____.

Exhibit B Appurtenant Easements

Also conveying the right and easement, in common with CMP and others, to use those rights of access reserved by CMP in a deed to Carroll A. Curtis dated April 14, 1960 and recorded in said Registry in Book 568, Page 355, provided however, that CMP and the Town shall share any road maintenance costs to the extent of their respective use.

Also conveying the right and easement to overflow and flood all of the lands currently flooded by the dam on the premises herein conveyed, including, but not limited to~~certain~~ lands described in the following deeds to Central Maine Power Company, all recorded in the Lincoln County Registry of Deeds:

Lincoln B. Merry dated January 13, 1942 and recorded in Book 440, Page 492;
Raymond D. Hamlin dated February 5, 1942 and recorded in Book 444, Page 386;
Harry E. Wing dated January 14, 1942 and recorded in Book 444, Page 335;
Alton E. Ames dated February 3, 1942 and recorded in Book 440, Page 490;
Leander B. Nichols dated February 5, 1942 and recorded in Book 44, Page 387;
Town of Wiscasset dated April 8, 1942 and recorded in Book 440, 561;
Gladys E. Bailey dated January 13, 1942 and recorded in Book 440, Page 491;

The Town, for itself and its successors and assigns, covenants and agrees with CMP, its successors and assigns, as follows:

1. Said right to overflow and flood is limited to a normal full pond elevation established by a spillway elevation of 111 feet with flashboard elevation not to exceed 113 feet~~of 115 feet~~, as determined from the top of the easterly retaining wall of Central Maine Power Company's Montsweag Dam (the "Dam"), which retaining wall was established at an elevation of 116 feet U.S.G.S. Datum.
2. In the event the Town removes and does not replace the ~~d~~Dam ~~on the Premises across Montsweag Brook~~, or the ~~d~~Dam is breeched by natural causes and not repaired or rebuilt for a period of five years, the Town will release to CMP that portion of the above referenced flowage easement rights that encumber land or easement rights then owned by CMP.
3. The Town will, upon reasonable notice by CMP, temporarily lower the water level in the pond to facilitate construction or maintenance of CMP's electric transmission lines, provided, however, that CMP obtain any permits and perform any work required to facilitate such temporary lowering of the water level.

AMENDED AND RESTATED

Formatted: All caps

DECLARATION OF COVENANTS AND RESTRICTIONS

Montsweag Brook Parcel, Wiscasset & Woolwich, Maine

THIS DECLARATION OF COVENANTS AND RESTRICTIONS is made this _____ day of ~~August~~_____, 2012~~0~~ by **Central Maine Power Company**, a Maine corporation with an address of 83 Edison Drive, Augusta, Kennebec County, Maine 04336, (herein referred to as the "Declarant"), pursuant to State of Maine Department of Environmental Protection Site Location of Development Act and Natural Resources Protection Act Orders, Project Number #L-24620-26-A-N/L-24620-TG-B-N/L-24620-VP-C-N/L-24620-IW-D-N/L-24620-L6-E-N and U.S. Army Corps of Engineers Permit Number #NAE-2008-03017 (hereinafter referred to as "Order"), relating to preservation of an approximately ~~27~~ 22 acre parcel of land southerly of Bradford Road, Wiscasset Maine now or formerly known as the Montsweag Brook Parcel.

RECITALS

WHEREAS, the Declarant holds title to certain real property situated in Wiscasset and Woolwich, Maine described in the following deeds from recorded in the Lincoln and Sagadahoc County Registry of Deeds:

Louise I. Bailey	Book 440, Page 389 (Lincoln)
Louise I. Bailey	Book 466, Page 337 (Lincoln)
Lawrence R. Seavey	Book 444, Page 582 (Lincoln)
Viola May Seavey Beane	Book 227, Page 30 (Sagadahoc)

and identified by the Town of Wiscasset as map R7, lot 92 and the Town of Woolwich as map R5.

WHEREAS, Declarant desires to place certain deed covenants, under the terms and conditions herein, over said real property (hereinafter referred to as the "Covenant Area") described in **Exhibit A**, attached and made a part hereof.

WHEREAS, pursuant to the Site Location of Development Act, Title 38 M.R.S.A. Sections 481 et seq., the Natural Resources Protection Act, Title 38 M.R.S.A. Section 480-A et seq., Chapter 310 and Chapter 335 of regulations promulgated by the Maine Department of Environmental Protection (the "Wetlands and Waterbodies Protection Rules" and "Significant Wildlife Habitat Rules"), Declarant has agreed, in satisfaction of the Order, to impose certain covenants and restrictions on the Covenant Area as more particularly set forth herein and has agreed that such covenants and agreements may be enforced by the Maine Department of Environmental Protection (hereinafter the "MDEP") or any successor in interest.

NOW, THEREFORE, the Declarant hereby declares that the Covenant Area is and shall forever be held, transferred, sold, conveyed, occupied and maintained subject to the covenants, conditions and restrictions set forth herein (sometimes referred to as the "Covenants and Restrictions"). The Covenants and Restrictions shall run with the Covenant Area and shall be binding on all parties having any right, title and interest in and to the Covenant Area, or any portion thereof, and their heirs, personal representatives, successors, and assigns. Any present or future owner or occupant of the Covenant Area or any portion thereof, by the acceptance of a deed of conveyance of all or part of the Covenant Area or an instrument conveying any interest therein, whether or not the deed or instrument shall so express, shall be deemed to have accepted the Covenant Area subject to the Covenants and Restrictions and shall agree to be bound by, to comply with and to be subject to each and every one of the Covenants and Restrictions hereinafter set forth.

Fee title to the Covenant Area will be conveyed to ~~The Chewonki Foundation~~The Inhabitants of the Municipality of Wiscasset (hereinafter "Grantee").

Except for the conveyance to the Grantee, The Declarant shall provide a 60-day advance notification to the MDEP~~Grantee~~ and the U.S. Army Corps of Engineers pursuant to permit No. NAE-2008-03017, before any action is taken to void or modify this instrument, including transfer of title to, or establishment of any other legal claims.

Any transfer of ownership of the land covered by this document shall include a subordination agreement, as necessary, to give the conservation easement (or restriction) priority in any title chain, so that the land and resources covered by the document can be protected into perpetuity.

If protected mitigation property is taken in whole or in part through eminent domain, the consequential value of the property protected by the Clean Water Act is the cost of the replacement of the conservation functions, services, and values with other property in the same biophysical region and shall be provided by the party exercising eminent domain.

Restrictions on Covenant Area. Unless the owner of the Covenant Area, or its successors or assigns, obtains the prior written approval of the MDEP, (or any successor thereof), the Covenant Area shall remain in a natural and open condition in order for it to fulfill its historic, scenic, vegetative, wildlife and/or hydrologic functions in perpetuity.

1. the Covenant Area shall not be subdivided and none of the individual tracts, which together comprise the Covenant Area, shall be conveyed separately from one another;

2. subject to Exception One, Exception Two and Exception Three, below, no soil, loam, peat, sand, gravel, concrete, rock or other mineral substance, refuse, trash, vehicle bodies or parts, rubbish, debris, junk waste, pollutants or other fill material will be placed, stored or dumped on the Covenant Area and the surface

waters contained thereon, nor shall the topography of the area be altered or manipulated in any way;

3. subject to Exception One, Exception Two and Exception Three, below, there shall be no manipulation or alteration of the natural watercourses, lakeshores, marshes or other water bodies, ~~except as allowed for permitted fish passage restoration projects,~~ nor shall any uses of or activities upon the Covenant Area be permitted which could be detrimental to water purity or to any vegetative, wildlife or hydrological function;

4. subject to Exception One, Exception Two and Exception Three, below, no trees, grasses, shrubs, vines, or other vegetation shall be cut, removed or destroyed, except that de minimis flower picking shall be allowed, and clearing will be allowed for the maintenance of any path or trail, and dead wood which is leaning or fallen may be removed;

5. invasive species may be eradicated, controlled, and removed by hand, mechanical, and/or chemical means. Any herbicides used on the Covenant Area will be EPA registered substances;

6. subject to Exception One, Exception Two and Exception Three, below, no ditches shall be dug, and no draining of the Covenant Area shall take place, and no pumping or any other removal of water shall occur on the Covenant Area, nor shall the manipulation or alteration of natural water courses or hydrology occur ~~except as allowed for permitted fish passage restoration projects~~;

7. subject to Exception One, Exception Two and Exception Three, below, no new structures shall be allowed on the Covenant Area, excepting minor structures such as signage, information kiosk, pedestrian bridges/boardwalks. Existing roads and parking areas necessary to access the Covenant Area for monitoring and public access may be maintained. These roads, parking areas and minor structures will be outlined in a Management Plan for the Covenant Area; and,

8. subject to Exception One, Exception Two and Exception Three, below, no trucks, cars, dirt bikes, ATVs, bulldozers, backhoes, or other motorized vehicles or mechanical equipment shall be permitted on the Covenant Area, except as needed ~~to achieve permitted fish restoration projects and~~ in the case of emergencies.

Exception One – Montsweag Brook Dam. The Declarant, its successors and assigns may maintain, repair replace, alter rebuild or remove the existing dam over Montsweag Brook in substantially its current location and maintain the water level above the dam at its historic full pond level or any lesser level. Further, all necessary and applicable machinery and motorized vehicles shall be allowed in the Covenant Area to maintain, repair, replace, alter, rebuild or remove this dam after written application and approval from any local, state or federal agencies from which approval is required. The deed from the Declarant to the Grantee shall stipulate the maximum level which from

Formatted: List Paragraph, Left, No bullets or numbering

Formatted: Underline

Formatted: No bullets or numbering

time to time the Grantee may keep the pond behind the dam, and any level at or below this maximum level, and its resulting flooding, is allowed hereunder.

~~8.~~

~~Exception. There is presently a dam on the Covenant Area over Montsweag Brook which flows through the Covenant Area. Consequently a portion of the Covenant Area is flooded. Nothing in this Declaration shall prohibit the continued use and maintenance of this dam and the flooding which results from it. Further, all necessary and applicable machinery and motorized vehicles shall be allowed in the Covenant Area to maintain, repair, replace, alter or remove this dam after written application and approval from any local, state or federal agencies from which approval is required. The deed from the Declarant to the Grantee shall stipulate the maximum level which from time to time the Grantee may keep the pond behind the dam, and any level at or below this maximum level, and its resulting flooding, is allowed hereunder.~~

~~Further~~ Exception Two – Utilities. ~~5.~~ The Declarant may enter upon the Covenant Area to ~~conduct the following activities after written application and approval from any local or state agencies for which approval is required:~~

maintain, repair and replace existing overhead and underground utilities and install such new utilities from time to as are necessary for the operation, maintenance or removal of the above mentioned dam;

Exception Three – Fish Passage Restoration. The Declarant, its heirs and assigns, reserves the right to investigate the feasibility of restoring fish passage to the upper Montsweag Brook watershed, including the section of Montsweag Brook that runs through the Covenant Area, by means of a fish ladder or, with the Grantee's consent, partial, or full removal of the dam located on the Covenant Area. Declarant, its heirs and assigns, will obtain all federal, state (including MDEP), and local permits and approvals prior to commencing any fish passage alterations on the Covenant Area.

Enforcement. The MDEP and/or USACOE may enforce any of the Covenants and Restrictions set forth above. Any future alterations of the Covenant Area must receive the prior approval in writing from the MDEP and/or USACOE.

Marking of Covenant Area. The perimeter of the Covenant Area shall at all times be plainly marked and maintained by the owner.

Covenant Area Transfers. The Declarant and all future owners of the Covenant Area shall include the following notice on all deeds, mortgages, plats, or any other legal instrument used to convey any interest in the Covenant Area. Failure to comply with this paragraph does not impair the validity or enforceability of these covenants and restrictions:

Formatted: Indent: Left: 0.19"

Formatted: Indent: Left: 0.19", Numbered + Level: 1 + Numbering Style: 1, 2, 3, … + Start at: 1 + Alignment: Left + Aligned at: 0.25" + Indent at: 0.5"

Formatted

Formatted: No underline

NOTICE: This Property is subject to Restrictive Conservation Covenants recorded at *(insert book/page references, counties, and date of recording)*

Binding Effect. The restrictions set forth herein shall be binding on any present or future owner of the Covenant Area. If the Covenant Area is at any time owned by more than one owner, each owner shall be bound by the foregoing restrictions but only to the extent that any of the Covenant Area is included within such owner's property.

Amendment. Any provision contained in this Declaration may be amended or revoked only by the recording of a written instrument or instruments specifying the amendment or the revocation signed by the owner or owners of the Covenant Area and by the MDEP (or any successor thereto).

Effective Provisions of Declaration. Each provision of this Declaration, and any agreement, promise, covenant and undertaking to comply with each provision of this Declaration, shall be deemed a covenant running with the land as a burden and upon the title to the Covenant Area.

Severability. Invalidity or unenforceability of any provision of this Declaration in whole or in part shall not affect the validity of enforceability of any other provision or any valid and enforceable part of a provision of this Declaration.

Governing Law. This Declaration shall be governed by and interpreted in accordance with the laws of the State of Maine.

Central Maine Power Company

By:_____

Franklyn Reynolds,
~~Raymond J. Pomerleau~~
Authorized Representative ~~Director of Property Management & Security~~

Formatted: Indent: Left: 3", First line: 0.5"

STATE OF MAINE
Kennebec, ss. 2012~~0~~.

Personally appeared before me the above named Franklyn Reynolds, authorized representative, ~~Raymond J. Pomerleau, Director of Property Management & Security~~ and acknowledged the foregoing instrument to be his free act and deed in his said capacity and the free act and deed of said Central Maine Power Company.

_____
Notary Public/Attorney at Law

_____

Printed Name:

Formatted: Centered

Acceptance by the State of Maine

This Declaration of Covenants and Restrictions amends that Declaration of Covenants and Restrictions by and Between Central Maine Power Company and the State of Maine, Department of Environmental Protection dated August 5, 2010 and recorded in the Lincoln County Registry of Deeds in Book 6304, Page 54 and also recorded in the Sagadahoc County Registry of Deeds in Book 3212, Page 136 (the "August 2010 Declaration") and replaces and supersedes the August 2010 Declaration in its entirety. The State of Maine, Department of Environmental Protection hereby consents to such amendment and replacement of the August 2010 Declaration.

State of Maine, Department of Environmental Protection

Formatted: Tab stops: 3", Left

By:
[Title]

STATE OF MAINE
Kennebec, ss. 2012.

Personally appeared before me the above named . [title] and acknowledged the foregoing instrument to be his/her free act and deed in his/her said capacity and the free act and deed of said State of Maine.

Notary Public/Attorney at Law

Printed Name:

Formatted: Left

Exhibit A
Legal Description
227± Acres +/-
Wiscasset & Woolwich, Maine

A certain lot or parcel of land situated on the Southerly side of, but not adjacent to, Bradford Road in the Town of Wiscasset, Lincoln County and the Town of Woolwich, Sagadahoc County, State of Maine bounded and described as follows:

Beginning at the intersection of the Northerly Sideline of Central Maine Power Co. transmission line Section 81, said sideline being 150 feet Northerly, as measured at right angles, of the centerline of Section 81 as it exists in 2010 (the "Section 81 North Sideline"), and the Southerly sideline of lands of Merwin Alexander Delano, III as described in a deed recorded in the Lincoln County Registry of Deeds in Book 3881, Page 164, at a capped iron rod set at the base of a horizontal cedar post;

Thence S 85° 38' 26" W along the Section 81 North Sideline, crossing over Montsweag Brook and into the Town of Woolwich, Sagadahoc County, a distance of 1154.98~~1534.13~~ feet to land now or formerly of Shirley Titcomb as described in a deed recorded in the Sagadahoc County Registry of Deeds in Book 511, Page 170~~the Easterly sideline of Central Maine Power Co. transmission line Section 392, said sideline being 185 feet Easterly, as measured at right angles, form the centerline of Section 392 as it exists in 2010 (the "Section 392 East Sideline")~~;

Thence N 07~~26~~° 12~~16~~' 53~~28~~" E along land of said Titcomb~~the Section 392 East Sideline~~ a distance of 464.96~~314.90~~ feet to a capped iron rod set;

Thence ~~S~~N 81~~36~~° 10~~30~~' 36~~05~~" E along land of said Titcomb~~the Section 392 East Sideline and crossing into the Town of Wiscasset,~~ a distance of 111.00~~2584.58~~ feet to a capped iron rod set, said iron rod being one rod distant westerly measured at right angles from a point on the contour line at an elevation of 125 feet, as determined from the top of the easterly retaining wall of Central Maine Power Company's Montsweag Dam, which retaining wall was established at an elevation of 116 feet U.S.G.S. Datum~~,~~;

Thence extending in a generally northerly direction along land of said Titcomb, said line being a meandering line parallel with and one rod distant westerly of said 125-foot contour line, a distance of 650 feet more or less to the easterly sideline of Central Maine Power Company transmission line Section 392, said sideline being 185 feet easterly, as measured at a right angle from the centerline of Section 392 as it exists in 2012 (the "Section 392 East Sideline");

Thence N 36° 30' 05" E along the Section 392 East Sideline and crossing into the Town of Wiscasset, Lincoln County, a distance of 1578.75 feet to a capped iron rod set at other land of Central Maine Power Company;

Thence S 82° 15' 43" E along other land of Central Maine Power Company described in a deed recorded in the Lincoln~~Waldo~~ County Registry of Deeds in Book 662, Page 86, a distance of 171 feet more or less to the centerline of Montsweag Brook;

Thence Southerly along said centerline and land now or formerly of Richard W. Hanson as described in a deed recorded in the Lincoln County Registry of Deeds in Book 594, Page 155, a distance of 259 feet more or less;

Thence S 57° 11' 25" E along said land of Hanson 241 feet more or less to land now or formerly of Merwin Alexander Delano, III; at a cedar post found standing, said post being one rod distant southeasterly measured at right angles from a point on the contour line at an elevation of 125 feet, as determined from the top of the easterly retaining wall of Central Maine Power Company's Montsweag Dam, which retaining wall was established at an elevation of 116 feet U.S.G.S. Datum;

Thence extending in a general southwesterly direction along said land of Delano, said line being a meandering line parallel with and one rod distant easterly of said 125-foot contour line, a distance of 2,300 feet more or less to a capped iron rod set at the base of a cedar post found, the tie line between the afore mentioned found cedar post and said capped iron rod being a distance of 1880.47 feet on a bearing of S 29° 10' 17" W;

Thence S 64° 45' 24" E along said land of Delano a distance of 631.41 feet to the Section 81 North Sideline and the point of beginning, containing 22~~7~~ acres more or less.

All bearings are based on UTM Zone 19 North.

Reference is made to the survey by Owen Haskell, Inc. dated 02/11/2010 Job No. 2009-171 Wi-L and recorded in the Lincoln County Registry of Deeds in Book 95_____, Page 63_____ and in the Sagadahoc County Registry of Deeds in Book 47_____, Page 26_____ for a further description of the above described premises;

Being part of the premises acquired by Central Maine Power Company by the following deeds recorded in the Lincoln County Registry of Deeds:

Louise I. Bailey to Central Maine Power Company dated November 10, 1941, and recorded in Book 440, Page 389;
Louise I. Bailey to Central Maine Power Company dated July 5, 1946, and recorded in Book 466, Page 337;
Lawrence R. Seavey (aka Laurence R. Seavey) to Central Maine Power Company dated February 9, 1942 and recorded in Book 444, Page 582; and
Viola May Seavey Beane (aka Bean) recorded in the Sagadahoc County Registry of Deeds in Book 227, Page 30.

Excepting from this conveyance and reserving to Central Maine Power Company, its successors and assigns, the right and easement at all times to enter the conveyed premises adjacent to the retained land of Central Maine Power Company located southerly and

westerly of the herein conveyed premises, for the purpose of cutting or trimming and removing such tall tree or trees as in falling would in the judgment of Central Maine Power Company, its successors and assigns, interfere with or endanger the operation and maintenance of any electric transmission lines existing or constructed on said retained lands.

QUITCLAIM DEED
WITH COVENANT

Formatted: Font: 11.5 pt

CENTRAL MAINE POWER COMPANY, a Maine corporation with an address of 83 Edison Drive, Augusta, Kennebec County, Maine 04336 ("CMP"), grants with Quitclaim Covenants to the INHABITANTS OF THE TOWN OF WISCASSET, a body politic with and address of 51 Bath Road, Wiscasset, Lincoln County, Maine 04578 ("Grantee") its rights in a certain parcel of land located on both sides of Montsweag Brook southerly of, but not adjacent to, Bradford Road in the Town of Wiscasset, Lincoln County, and the Town of Woolwich, Sagadahoc County, Maine being more particularly described as follows:

Formatted: Font: 11.5 pt

Beginning at the intersection of the northerly sideline of Central Maine Power Co. transmission line Section 81, said sideline being 150 feet Northerly, as measured at right angles, of the centerline of Section 81 as it exists in 2010 (the "Section 81 North Sideline"), and the southerly sideline of lands of Merwin Alexander Delano, III as described in a deed recorded in the Lincoln County Registry of Deeds in Book 3881, Page 164, at a capped iron rod set at the base of a horizontal cedar post;

thence S 85° 38' 26" W along the Section 81 North Sideline, crossing over Montsweag Brook and into the Town of Woolwich, Sagadahoc County, a distance of 1154.98 feet to land now or formerly of Shirley Titcomb as described in a deed recorded in the Sagadahoc County Registry of Deeds in Book 511, Page 170;

thence N 07° 12' 53" E along land of said Titcomb a distance of 464.96 feet to a capped iron rod set;

thence S 81° 10' 36" E along land of said Titcomb a distance of 111.00 feet to a capped iron rod set, said iron rod being one rod distant westerly measured at right angles from a point on the contour line at an elevation of 125 feet, as determined from the top of the easterly retaining wall of Central Maine Power Company's Montsweag Dam, which retaining wall was established at an elevation of 116 feet U.S.G.S. Datum;

thence extending in a generally northerly direction along land of said Titcomb, said line being a meandering line parallel with and one rod distant westerly of said 125-foot contour line, a distance of 650 feet more or less to the easterly sideline of Central Maine Power Company transmission line Section 392, said sideline being 185 feet easterly, as measured at a right angle from the centerline of Section 392 as it exists in 2012 (the "Section 392 East Sideline");

Formatted: Font: 11.5 pt

thence N 36° 30' 05" E along the Section 392 East Sideline and crossing into the Town of Wiscasset, Lincoln County, a distance of 1578.75 feet to a capped iron rod set at other land of Central Maine Power Company;

thence S 82° 15' 43" E along other land of Central Maine Power Company described in a deed recorded in the Lincoln County Registry of Deeds in Book 662, Page 86, a distance of 171 feet more or less to the centerline of Montsweag Brook;

thence Southerly along said centerline and land now or formerly of Richard W. Hanson as described in a deed recorded in the Lincoln County Registry of Deeds in Book 594, Page 155, a distance of 259 feet more or less;

thence S 57° 11' 25" E along said land of Hanson 241 feet more or less to land now or formerly of Merwin Alexander Delano, III; at a cedar post found standing, said post being one rod distant southeasterly measured at right angles from a point on the contour line at an elevation of 125 feet, as determined from the top of the easterly retaining wall of Central Maine Power Company's Montsweag Dam, which retaining wall was established at an elevation of 116 feet U.S.G.S. Datum;

thence extending in a general southwesterly direction along said land of Delano, said line being a meandering line parallel with and one rod distant easterly of said 125-foot contour line, a distance of 2,300 feet more or less to a capped iron rod set at the base of a cedar post found, the tie line between the afore mentioned found cedar post and said capped iron rod being a distance of 1880.47 feet on a bearing of S °29 10' 17" W;

thence S 64° 45' 24" E along said land of Delano a distance of 631.41 feet to the Section 81 North Sideline and the point of beginning, containing 22 acres more or less.

All bearings

are based on UTM Zone 19 North.

Reference is made to the survey by Owen Haskell, Inc. dated 02/11/2010 Job No. 2009-171 Wi-L and recorded in the Lincoln County Registry of Deeds in Book 95, Page 63 and in the Sagadahoc County Registry of Deeds in Book 47, Page 26 for a further description of the above described premises;

Formatted: Font: 11.5 pt

Being part of the premises acquired by Central Maine Power Company by the following deeds recorded in the Lincoln County Registry of Deeds:

Louise I. Bailey to Central Maine Power Company dated November 10, 1941, and recorded in Book 440, Page 389;

Louise I. Bailey to Central Maine Power Company dated July 5, 1946, and recorded in Book 466, Page 337;

Lawrence R. Seavey (aka Laurence R. Seavey) to Central Maine Power Company dated February 9, 1942 and recorded in Book 444, Page 582; and

Viola May Seavey Beane (aka Bean) recorded in the Sagadahoc County Registry of Deeds in Book 227, Page 30.

Excepting from this conveyance and reserving to Central Maine Power Company, its successors and assigns, the right and easement at all times to enter the conveyed premises adjacent to the retained land of Central Maine Power Company located southerly and westerly of the herein conveyed premises, for the purpose of cutting or trimming and removing such tall tree or trees as in falling would in the judgment of Central Maine Power Company, its successors and assigns, interfere with or endanger the operation and maintenance of any electric transmission lines existing or constructed on said retained lands.

The above described parcel is subject to a Declaration of Restrictions dated August 5, 2010 and recorded in the Lincoln County Registry of Deeds in Book 4304, Page 54, and in the Sagadahoc County Registry of Deeds in Book 3212 Page 136 and as revised _____, 2012 and recorded in said Registries respectively in Book . , Page _____ and Book _____, Page _____.

Also conveying the right and easement, in common with CMP and others, to those rights of access reserved by CMP in a deed to Carroll A. Curtis dated April 14, 1960 and recorded in said Registry in Book 568, Page 355, provided however, that CMP and the Town shall share any road maintenance costs to the extent of their respective use.

Also conveying the right and easement to overflow and flood all of the lands currently flooded~~certain lands~~ by means of the existing Central Maine Power Company dam across Montsweag Brook, or its replacement, (the "Dam"), including, but not limited to, lands described in the following deeds to Central Maine Power Company, all recorded in the Lincoln County Registry of Deeds:

Lincoln B. Merry dated January 13, 1942 and recorded in Book 440, Page 492;
Raymond D. Hamlin dated February 5, 1942 and recorded in Book 444, Page 386;
Harry E. Wing dated January 14, 1942 and recorded in Book 444, Page 335;
Alton E. Ames dated February 3, 1942 and recorded in Book 440, Page 490;
Leander B. Nichols dated February 5, 1942 and recorded in Book 44, Page 387;
Town of Wiscasset dated April 8, 1942 and recorded in Book 440, 561;
Gladys E. Bailey dated January 13, 1942 and recorded in Book 440, Page 491;

The Town, for itself and its successors and assigns, covenants and agrees with CMP, its successors and assigns, as follows:

1. Said right to overflow and flood is limited to a normal full pond elevation established by a spillway elevation of 111 feet with flashboard elevation not to exceed ~~of~~ 113~~5~~ feet, as determined from the top of the easterly retaining wall of the Dam, which retaining wall was established at an elevation of 116 feet U.S.G.S. Datum.
2. In the event the Town removes and does not replace the Dam, or the Dam is breeched by natural causes and not repaired or rebuilt for a period of five years, the Town will release to CMP that portion of the above referenced flowage easement rights that encumber land or easement rights then owned by CMP.
3. The Town will, upon reasonable notice by CMP, temporarily lower the water level in the pond to facilitate construction or maintenance of CMP's electric transmission

Formatted: Font: 11.5 pt

Formatted: Font: 11.5 pt

lines, provided, however, that CMP obtain any permits and perform any work required to facilitate such temporary lowering of the water level.

Formatted: No bullets or numbering

~~3.~~ By acceptance of this deed, the Inhabitants of the Town of Wiscasset acknowledge that CMP is an electric utility company and may have need to use any of its retained lands for utility purposes including, but not limited to, the construction and operation and maintenance of overhead electric transmission lines, substations and appurtenant facilities. The Inhabitants of the Town of Wiscasset, for themselves, and their successors and assigns, covenants and agrees with CMP that this conveyance shall not be the basis for objecting to any future proposals by CMP to use its retained land for such purposes.

Formatted: Font: 11.5 pt

IN WITNESS WHEREOF, the said Central Maine Power Company~~, an operating company of Iberdrola USA Management Corp.,~~ has caused its corporate name to be signed and its corporate seal affixed hereto by its duly authorized representative ~~Franklyn Reynolds, Vice President, General Services, Iberdrola USA Management Corp. hereunto duly authorized~~ this _____ day of March, 2012.

Signed, Sealed and Delivered
in presence of

CENTRAL MAINE POWER COMPANY

_____
Witness

By:_____
Franklyn Reynolds, Authorized Representative

STATE OF NEW YORK

County of Monroe, ss.

_____, 2012.

The above named Franklyn Reynolds, authorized representative, personally appeared before me, and acknowledged the foregoing instrument to be his free act and deed in his said capacity and the free act and deed of said Central Maine Power Company.

_____
Notary Public/Attorney At Law

10 B

5. ~~5.~~ BOARD OF APPEALS [3-99]

5.1 ESTABLISHMENT

Pursuant to 30-A MRSA ~~Const Art VIII A~~ Sections 3001 and 2691 the Town of Wiscasset, Maine, hereby establishes the Wiscasset Board of Appeals (hereinafter, "the Board"). [3-75,3-99]

5.2 APPOINTMENT AND COMPOSITION

5.2.1 The Board ~~of Appeals~~ shall be appointed by the ~~Board of Selectmen~~Selectboard and shall consist of five (5) members and two (2) alternate members, all of whom shall be legal residents of Wiscasset serving staggered terms of three (3) years. Alternate members shall attend all meetings. The Board shall elect annually a Chairperson and Secretary from its membership. The Secretary shall keep the minutes of the proceedings of the Board ~~of Appeals,~~ which shall show the vote of each member upon each question. All minutes of the Board shall be public records. A quorum shall consist of four (4) members. [3-75, 3-86, 3-99]

5.2.2 Neither a Municipal Officer nor his or her spouse may serve as a member or alternate member.

5.2.3 Any question of whether a particular issue involves a conflict of interest sufficient to disqualify a member from voting thereon shall be decided by a majority vote of the members, except the member who is being challenged.

5.2.4 A member of the Board may be dismissed for cause by the Selectmen.

5.3 ~~5.3~~ POWERS AND DUTIES

Formatted: Bullets and Numbering

5.3.1 ~~5.3.1~~ APPEALS

Formatted: Bullets and Numbering

The Board ~~of Appeals~~ shall have the power to hear any appeal by any person with legal standing from any decision, order, ~~rule~~ regulation or failure to act by the Planning Board, the Sign Control Officer, the Building Inspector, the Plumbing Inspector, the Electrical Inspector, the Harbor Master, ~~or~~ the Health Officer and the Code Enforcement Officer but only to the extent that s/he serves in one of these capacities. However, the Board of Appeals shall not have authority to hear an appeal pertaining to enforcement or non-enforcement of a law or ordinance; any such appeal shall instead

be directly to Superior Court. The Board of Appeals shall also hear any appeal where a Statute so directs. Any action or failure to act of any of the above may be modified or reversed by the Board of Appeals by concurring vote of at least four (4) members of the Board.

5.3.2 ~~VARIANCE REQUESTS~~VARIANCES

a. The Board ~~of Appeals~~ may grant a variance only when strict application of Wiscasset ordinances would cause undue hardship. A financial hardship shall not constitute grounds for granting a variance.

b. Undue Hardship as used herein shall mean:

- That the land in question cannot yield a reasonable return unless a variance is granted; and,
- That the need for a variance is due to the unique circumstances of the property and not to the general conditions in the neighborhood; and
- That the granting of a variance will not alter the essential character of the locality; and
- That the hardship is not the result of action taken by the applicant or a prior owner. [3-81]

c. When considering a request for a variance from any zoning ordinance, a variance is authorized only for height, area, and size of structure or size of yards or open places. Establishment or expansion otherwise prohibited shall not be allowed by variance, nor shall a variance be granted because of the presence of nonconformities in the Zoning District or uses in adjoining Zoning Districts. The Board ~~of Appeals~~ shall grant a variance only by concurring vote of at least four (4) members and, in so doing, may prescribe conditions and safeguards as are appropriate ~~under this Ordinance~~to minimize the variance granted.

5.3.3 DISABILITY VARIANCE [3-97]The Board ~~of Appeals~~ may grant a variance to an owner of a dwelling for the purpose of making that property accessible to a person with a disability who resides in or regularly uses the dwelling. Such variance shall be limited to the installation of equipment or the construction of structures necessary for access to or egress from the dwelling by the person with the disability.

The following conditions shall be met:

- the access structure is necessary to create an accessible route; and

- the access structure cannot be reasonably created without infringing on the standards otherwise established in these ordinances; and

- the design of the access structure conforms to the ADA Accessibility Guidelines; and

- the design of the access structure minimizes encroachment on or other variation to the standards otherwise established in these ordinances.

For purposes of this subsection, a disability has the same meaning as a physical or mental handicap under 5 MRSA Section 4553-A as it may be amended, and the term 'structures necessary for access to or egress from the dwelling' is defined to include railing, wall, or roof systems necessary for the safety or effectiveness of the structure.

5.3.4 Variances may be issued by a community for the reconstruction, rehabilitation or restoration of structures listed on the National Register of Historic Places or a state inventory of historic places, without regard to the procedures set forth in Section 5.3.2. [3-01]

5.4 APPEAL PROCEDURE

5.4.1 In all cases, an aggrieved person shall commence his or her appeal within 30 days after proper notice of a decision. The appeal shall be filed with the Board ~~of Appeals~~ on forms approved by the Board, and the aggrieved person shall specifically set forth on the form the grounds for the appeal.

5.4.2 Following the filing of an appeal, and before taking action on any appeal, the Board ~~of Appeals~~ shall hold a public hearing on the appeal within 30 days. The Board ~~of Appeals~~ shall notify the appellant and the board or person whose action or non-action is being appealed at least 10 days in advance of the time and place of the hearing, and shall publish notice of the hearing at least 10 days in advance in a newspaper of general circulation in the area. [3-97, 3-99]

5.4.3 The Board may provide, by regulation, which shall be recorded by the ~~secretary~~Secretary, for any matter relating to the conduct of any hearing, providing that the chair may waive any regulation upon good cause shown.

5.4.4 The ~~board~~ Board may receive any oral or documentary evidence but shall provide as a matter of policy for the exclusion of irrelevant, immaterial, or unduly repetitious evidence. Every party has the right to present the ~~party'~~ party's case or defense by oral or documentary evidence, to submit rebuttal evidence and to conduct any cross-examination through the chair that is required for a full and true disclosure of the facts.

5.4.5 The ~~board~~ Board may reconsider any decision reached under this section within ~~30~~ 45 days of its prior decision. A request to the Board to reconsider a decision must be filed within 10 days of the decision that is to be reconsidered. A vote to reconsider and the action taken on that reconsideration must occur and be completed within ~~30~~ 45 days of the vote on the original decision. The Board may conduct additional hearings and receive additional evidence and testimony. Notwithstanding subsection 5.4.6, appeal of a reconsidered decision must be made within 15 days after the decision on reconsideration.

5.4.6 Any party may take an appeal, within 45 days of the date of the vote on the original decision, to Superior Court from any order, ~~of~~ relief or denial in accordance with the Maine Rules of Civil Procedure Rule 80-B.

5.5 VARIANCE PROCEDURE

5.5.1. In requests for variances, the Board of Appeals shall notify by first class mail the appellant and owners of all property within 500 feet of the property involved at least 10 days in advance of the hearing, of the nature of the request and of the time and place of the public hearing. For the purpose of this section, abutting properties shall include properties directly across a street or water body from the property for which the appeal is made. [3-97, 3-99]

5.5.2 The owners of property shall be considered to be those against whom taxes are assessed. Failure of any property owner to receive a notice of public hearing shall not necessitate another hearing or invalidate any action by the Board ~~of Appeals~~.

5.5.3 At any hearing, a party may be represented by an agent or attorney. Hearings shall not be continued to other times except for good

cause. A letter authorizing an agent or attorney to speak or act for the party must be submitted prior to the hearing. [3-99]

5.5.4 Within 20 days of the public hearing, the Board ~~of Appeals~~ shall reach a decision on a request for a variance and shall inform, in writing, the appellant, and the appropriate Officer, Agency, Board or other body of the municipality of its decision and its reasons therefore.

5.5.5 A variance granted under the provision of this Ordinance by vote of the Board of Appeals shall expire if the work or change involved is not commenced within one year of the date on which the appeal is granted, and if the work or change is not substantially completed within two years.

5.6 SEVERABILITY

The invalidity of any section or provision of this ordinance shall not invalidate any other section or provision hereof.

Section 8.2 and 8.2.1 make no sense. It is supposed to spell out the duties of the ORC but then never mentions it. The reference to 8.2.3 suggests that portions of this ordinance may be missing, or that parts were repealed leaving 8.2.1 as an orphan. I do not feel that the section is important anyway since other portions of this ordinance pretty well spell out the Committee's duties.

Section 8.4.1 does not really square with 8.1. That is, 8.1 states that the Committee works at the request of the Selectboard while 8.4.1 states that it addresses issues referred to it my the Selectboard, the Planning Board, the Town Planner (and I inserted the Town Manager).

You previously said that there are other ordinances you would like to have reviewed. If so, please send them to me in word format as you did Article I and I'll get going on them.

7. AIRPORT COMMITTEE [3-98]

7.1 MEMBERSHIP

7.1.1 The Wiscasset Airport Committee (hereafter referred to as the Committee) shall consist of five members who shall be Wiscasset ~~citizens~~residents.

7.1.2 Appointments to the Committee shall be made by the ~~Selectmen~~Selectboard.

7.1.3 The term of each member shall be three years, except the initial appointments, which shall be two for one year, two for two years and one for three years.

7.1.4 Members shall serve at the pleasure of the Selectboard~~Selectmen~~.

7.2 ORGANIZATION

7.2.1 The Committee shall annually elect a ~~Chairman~~ Chairperson and a Secretary from its membership.

7.2.2 The ~~Chairman~~ Chairperson shall moderate the meetings and shall represent the membership as necessary unless another representative has been designated.

7.2.3 The Secretary shall keep the minutes, prepare correspondence as necessary, and maintain the Committee records in such place in the Town Office as the ~~Selectmen or~~Selectboard ~~their~~ or its staff shall designate.

7.2.4 A quorum shall consist of three members.

7.3 DUTIES

7.3.1 The Committee shall meet at least once a month to review general operations and conditions at the airport.

7.3.2 The Committee shall annually present a recommended operational budget for the airport to the Selectboard, the Town Manager~~Selectmen~~ and the Budget Committee.

7.3.3 The Committee shall from time to time make recommendations to the Selectboard~~Selectmen~~ regarding airport operations and conditions.

7.3.4 The Committee shall assume any other duties as directed by the Selectboard~~Selectmen~~.

8. ORDINANCE REVIEW COMMITTEE (6-2005)

8.1 PURPOSE

The ~~purpose of the~~ Ordinance Review Committee (hereinafter referred to as the Committee)shall, at the request of the Selectboard~~Selectmen~~, provide the Selectboard~~Selectmen~~, Town Manager, Planning Board and Town Planner with advice and recommendations on existing ordinance revisions, ordinance amendments, ordinance adoptions, and rezoning applications. Issues that may be considered include land use, community planning, growth-related matters, general ordinance development, and other issues which may ultimately affect the quality of life for present and future residents of the area.

The objectives of the Committee are: 1) to provide an opportunity for public involvement in the community planning process, 2) to create an open process whereby the public is encouraged to participate, and 3) to provide peer review on general ordinance alterations and proposed land use change-related matters.

~~8.2DUTIES~~

Formatted: Bullets and Numbering

~~8.2.1All requests for proposed ordinance amendments, ordinance adoptions and rezoning applications shall be submitted to the Town Planner, except as noted in 8.2.3. The Town Planner shall notify the Selectboard~~Selectmen~~, Town Manager and Planning Board of requests to amend Town ordinances~~

Formatted: Bullets and Numbering

8.2~~8.3~~ MEMBERSHIP

~~8.3.1~~8.2.1 The Committee shall be comprised of six members who shall be Wiscasset ~~citizens~~residents. The Committee shall be composed of 3 Planning Board Members, 2 at-large members, and 1 Comprehensive Plan Committee member or 1 additional at-large member.

Formatted: Indent: Left: 0.5", No bullets or numbering

Formatted: Bullets and Numbering

~~8.3.2~~8.2.2 Appointments to the Committee shall be made by the Selectboard~~Selectmen~~. Membership shall be three-year staggered terms.

Formatted: Indent: Left: 0.5", No bullets or numbering

Formatted: Bullets and Numbering

8.43 ~~8.4~~ DUTIES & OPERATIONS

Formatted: Outline numbered + Level: 2 + Numbering Style: 1, 2, 3, … + Start at: 43 + Alignment: Left + Aligned at: 0" + Indent at: 0.29"

~~8.4.1~~8.3.1 Meetings of the Committee shall be held as needed to address issues that arise or as referred by the Selectboard~~Selectmen~~, Town Manager, Planning Board or Town Planner. An annual meeting shall be held in September of each year. All requests for proposed ordinance amendments, ordinance adoptions and rezoning applications shall be submitted to the Town Manager who shall present the request to the Town Planner & Selectboard.

Formatted: Indent: Left: 0.5", No bullets or numbering

Formatted: Bullets and Numbering

~~8.4.2~~8.3.2 The Committee shall elect a Chairperson from its membership at its annual meeting in September.

Formatted: Indent: Left: 0.5", No bullets or numbering

Formatted: Bullets and Numbering

~~8.4.3~~8.3.3 The Chairperson shall preside, when present, at any Committee meeting and generally shall fulfill all of the duties usually performed by the Chairperson. In the absence of the Chairperson another member may be designated.

Formatted: Indent: Left: 0.5", No bullets or numbering

Formatted: Bullets and Numbering

~~8.4.4~~8.3.4 A quorum shall consist of four members.

Formatted: Indent: Left: 0.5", No bullets or numbering

Formatted: Bullets and Numbering

In 4.4.3 I put in the bit about "except where an ordinance or statute says otherwise" because the proposed subdivision ordinance spells out procedure in great detail.

I deleted the last sentence in 4.4.5 because it is basically the first sentence in 4.4.6.

4.4.6: First, the Board has a recording secretary as permitted under 4.3.1. So it might not be accurate for 4.4.6 to state that the Secretary will record the minutes; that is why I changed the opening few lines. Next, do we really want the Secretary to have to distribute the minutes to Local Newspapers? Certainly the newspapers can request copies, but why should the Secretary have to send copies unless the press wants them? Also, of course, "Local" is not defined, and I understand that there are more copies of the Lincoln County News sold in Wiscasset then there are of the Wiscasset Newspaper -- so is the Lincoln County News a local paper? Deleted by MG

4. PLANNING BOARD

4.1 Pursuant to ~~MRSA Const. Art. VIII-A and~~ 30-A MRSA Sec. 3001, the Town of Wiscasset, Maine, hereby establishes the Wiscasset Planning Board (hereinafter. "the Board"). [3-75]

4.2 APPOINTMENT AND DISMISSAL

4.2.1 Appointments to the Board shall be made by the ~~Selectmen~~Selectboard.

4.2.2 The Board shall consist of nine (9) members. [3-99, 3-01]

4.2.3 The term of each member shall be three (3) years. [3-99]

4.2.4 When there is a vacancy, the ~~Selectmen~~ Selectboard shall within 30 days of its occurrence appoint a person to serve for the unexpired term.

4.2.5 Neither a Municipal Officer nor his or her spouse may serve as a member.

4.2.6 Not more than one (1) non-resident of the Town of Wiscasset may serve as a member.

4.2.7 A member of the Board may be dismissed for cause by the ~~Selectmen~~ Selectboard after notice and a hearing.~~upon written notice of charges and after public hearing.~~ Seven days' advance notice of said hearing shall be given to the person ~~so dismissed~~who is the subject of the dismissal action.

4.3 OFFICERS AND TERMS OF OFFICE

4.3.1 The Board shall elect a Chairperson and a Secretary from among its members ~~and a Recording Secretary who need not be a member,~~ and create and fill such other offices as it may determine. The term of all offices shall be one (1) year, or until a successor is elected, with eligibility for re-election. [3-99]

4.3.2 Any question of whether a member shall be disqualified from voting on a particular matter shall be decided by a majority vote of the members except the member who is being challenged.

4.3.3 The ~~chairperson~~ Chairperson ~~shall~~ will call at least one regular meeting of the Board each month, unless there is no business requiring Planning Board attention.~~.~~ Special meetings may be called with 3 days~~'~~ notice to members.

4.3.4 No action of the Board shall be taken without a quorum consisting of five (5) members.

4.3.5 The Board shall adopt all internal rules for transaction of business, and the ~~secretary~~ Secretary shall keep a record of its resolutions, transactions, correspondence, findings and determinations. All records shall be deemed public, and may be inspected at reasonable times.

4.4 DUTIES AND POWERS [3-99]

4.4.1 The Board shall perform such duties and exercise such powers as provided by Wiscasset ordinance and the laws of the State of Maine.

4.4.2 The Board may obtain goods and services necessary to its proper function within the limits of appropriations made for this purpose.

4.4.3 The Board shall have power to establish by rules and regulations procedural requirements related to duties imposed upon it ~~by Section 4.4.2 of~~ by ~~this~~ Wiscasset's ~~ordinance~~ordinances or by statute except where specific procedural requirements are set out in Wiscasset's ordinances or by the applicable statute. The public shall be given an opportunity to review such rules and regulations at a public hearing held with seven (7) days~~'~~ notice prior to the establishment of such rules and regulations.

4.4.4 In the absence of the Chairperson~~Chairman~~, an Acting Chairperson~~Chairman~~ will be elected by a majority vote of the members of the ~~Planning~~ Board in attendance. The Acting

ChairpersonChairman will preside over business of the Planning Board with the full authority of the ChairpersonChairman. [3-81]

4.4.5 In the absence of the Board Secretary, the ChairpersonChairman or Acting ChairpersonChairman will appoint a member of the Planning Board, in attendance, to act as Acting Secretary. The Acting Secretary will make a record of all business coming before the Planning Board and cause such to be distributed in the manner described below: [3-81]

4.4.6 The Secretary or Acting Secretary shall cause theThe minutes of all business coming before the Planning Board shall to be recorded by the Secretary or Acting Secretary and shall be distributeddistribute the minutes in the manner described below to: Planning the Board members, the SelectmenSelectboard, the Code Enforcement OfficerTown Engineer, Plumbing and Building Inspectors, Planning, the Water Department, the Town Planner, the Board's F file, and others including but not limited to the Local Newspapers, the parties affected by the Planning Board's decisions, parties under contract to the Town or Planning Board, interested Town officials, Code Enforcement Officer and others affected by Planning Board decisions or and persons requesting copies of Planning Board Minutesthe minutes. [3-81]

4.4.7 Applications for Planning Board action shall be on such form(s) or ———in such form as required by the Planning Board or applicable ordinance.
[3-81, 3-01]

4.5 An appeal may be taken within 30 days after a decision is rendered to the Board of Appeals from any order, relief, or denial issued by the Planning Board.

4.6 The invalidity of any section or provision of the this ordinance shall not invalidate any other section or provision hereof.

Here is an amended Article I, section 6. In 6.1 it was hard for me to determine who "they" referred to: the 3 officers or the Selectboard. If it refers to the Selectboard, then Town Manager should be plugged in. 6.5 confuses me: it appears that much of what is included there would properly be the duty of the CEO rather than the Fire Chief. 6.6 reads like trying to speak with a mouth full of marbles. I tried to bring it more closely into accord with the applicable statutory section while at the same time preserving the marbles that were already there. I think it would be better and clearer to simply copy or paraphrase the statute in this sub-section.

Note that I completely deleted sections 7 and 8. This is because I was going to do all three sections on the same track-changes document but I needed to know first who appoints the members of the Committees and to whom the Committees report. We exchanged notes on this, but I am uncertain what your final thoughts might be. So since I was in a track-change mode the only way I could "eliminate" sections 7 and 8 from the document was to delete them meaning, of course, drawing blue lines through them.

6. FIRE DEPARTMENT

6.1 The ~~Selectmen~~ Town shall maintain ~~the~~ a ~~fire department~~Fire Department in Wiscasset, consisting of a Chief, a First Assistant Chief, a Second Assistant Chief, and as many members as ~~they~~ these officers deem necessary. ~~They~~ These officers shall have general control of the firehouse. [3-46]

6.2 The ~~Selectmen~~ Selectboard shall determine the salary of the Chief, the First Assistant Chief and the Second Assistant Chief, and the compensation of the members of the department shall be fixed in the Annual Town Meeting, unless the voters otherwise direct. [3-46]

6.3 The ~~Selectmen~~Town Manager, ~~at their first meeting~~ following the Annual Town Meeting, shall appoint a Chief who shall hold office during ~~their~~the Town Manager's -pleasure, not exceeding one year, from July 1st following the date of appointment. [3-46, 6-10]

6.4 The Chief of the Fire Department shall have full and complete charge of the ~~men~~ personnel and equipment of the department; ~~he~~ the Chief shall further have all the authority of Fire Wards and Fire Inspectors under 25 MRSA Sections 2391-~~2401~~2395. ~~He~~ The Chief shall appoint both the First Assistant Chief and the Second Assistant Chief who shall serve during ~~his~~ the Chief's pleasure. If the Office of Chief shall become vacant for any cause, the First Assistant Chief shall become acting chief until the Town Manager appoints~~appointment of~~ a new Chief. ~~He~~ The Chief shall give the ~~Selectmen~~ Town Manager each year a report of the work of the Department with a complete inventory of the equipment together with his or her recommendations. [3-46]

6.5 The ~~Fire~~ Chief shall examine or cause to be examined all buildings reported dangerous or damaged by fire or accident and make or cause to be made a record of such examinations stating the nature and amount of

such damage, the name of the street and the number or location of the building, with the names of the owner and occupant, and the purpose for which it is occupied, and in case of fire, the probable cause thereof, shall examine or cause to be examined all buildings for which applications have been made for permits to raise, enlarge, alter, build upon or tear down and make or cause to be made a record of such examinations and report to the ~~Selectmen~~Town Manager. The records required by this section shall always be open to the Town Manager, the Selectboard, the officers of the Fire Department or any officer of the town, and to any other parties, the value of whose property may be affected by the matters to which such records relate. [3-46, 3-02]

6.6 It shall be the duty of the ~~Fire~~ Chief to examine or cause to be examined premises where fire is at any time used and where danger is apprehended ~~there-from~~therefrom, and ~~to examine~~ all places where ashes may be collected or deposited, and to direct in an order served upon the owner and the occupant that the premises be vacated, or that such alterations, repairs or removal ~~to be~~ be made, in such cases as may be required, if in ~~his~~ the Chief's opinion he ~~may consider~~or she considers it dangerous to the security of the village, to other property, or to the public, from fire. And in case of the neglect or refusal of the owner or occupant of such ~~building~~ premises to vacate the premises, or to make or commence to make such alterations, repairs or removals, within ~~forty eight hours~~the time set forth in the order ~~after notice~~, the ~~Fire~~ Chief may ~~cause the same to be done at the expense of said owner or occupant~~institute a court action for appropriate relief pursuant to 25 MRSA 2393. [3-46, 3-02]

~~7. AIRPORT COMMITTEE [3-98]~~

~~7.1 MEMBERSHIP~~

~~7.1.1 The Wiscasset Airport Committee (hereafter referred to as the Committee) shall consist of five members who shall be Wiscasset citizens.~~

~~7.1.2 Appointments to the Committee shall be made by the Selectmen.~~

~~7.1.3 The term of each member shall be three years, except the initial appointments, which shall be two for one year, two for two years and one for three years.~~

~~7.1.4 Members shall serve at the pleasure of the Selectmen.~~

~~7.2 ORGANIZATION~~

~~7.2.1 The Committee shall annually elect a Chairman and a Secretary from its membership.~~

~~7.2.2 The Chairman shall moderate the meetings and shall represent the membership as necessary unless another representative has been designated.~~

~~7.2.3 The Secretary shall keep the minutes, prepare correspondence as necessary, and maintain the Committee records in such place in the Town Office as the Selectmen or their staff shall designate.~~

~~7.2.4 A quorum shall consist of three members.~~

~~7.3 DUTIES~~

~~7.3.1 The Committee shall meet at least once a month to review general operations and conditions at the airport.~~

~~7.3.2 The Committee shall annually present a recommended operational budget for the airport to the Selectmen and Budget Committee.~~

~~7.3.3 The Committee shall from time to time make recommendations to the Selectmen regarding airport operations and conditions.~~

~~7.3.4The Committee shall assume any other duties as directed by the Selectmen.~~

Formatted: Bullets and Numbering

~~8. ORDINANCE REVIEW COMMITTEE (6-2005)~~

~~8.1 PURPOSE~~

~~The purpose of the Ordinance Review Committee shall, at the request of the Selectmen, provide the Selectmen, Planning Board and Town Planner with advice and recommendations on existing ordinance revisions, ordinance amendments, ordinance adoptions, and rezoning applications. Issues that may be considered include land use, community planning, growth related matters, general ordinance development, and other issues which may ultimately affect the quality of life for present and future residents of the area.~~

~~The objectives of the Committee are: 1) to provide an opportunity for public involvement in the community planning process, 2) to create an open process whereby the public is encouraged to participate, and 3) to provide peer review on general ordinance alterations and proposed land use change related matters.~~

~~8.2DUTIES~~

Formatted: Bullets and Numbering

~~8.2.1All requests for proposed ordinance amendments, ordinance adoptions and rezoning applications shall be submitted to the Town Planner, except as noted in 8.2.3. The Town Planner shall notify the Selectmen and Planning Board of requests to amend Town ordinances~~

Formatted: Bullets and Numbering

~~8.3 MEMBERSHIP~~

~~8.3.1The Committee shall be comprised of six members who shall be Wiscasset citizens. The Committee shall be composed of 3 Planning Board Members, 2 at-large members, and 1 Comprehensive Plan Committee member or 1 additional at-large member.~~

Formatted: Bullets and Numbering

~~8.3.2Appointments to the Committee shall be made by the Selectmen. Membership shall be three-year staggered terms.~~

Formatted: Bullets and Numbering

~~8.4 OPERATIONS~~

~~8.4.1Meetings of the Committee shall be held as needed to address issues that arise or as referred by the Selectmen, Planning Board or Town Planner. An annual meeting shall be held in September of each year.~~

Formatted: Bullets and Numbering

~~8.4.2The Committee shall elect a Chairperson from its membership at its annual meeting in September.~~

Formatted: Bullets and Numbering

~~8.4.3The Chairperson shall preside, when present, at any Committee meeting and generally shall fulfill all of the duties usually performed by the Chairperson. In the absence of the Chairperson another member may be designated.~~

Formatted: Bullets and Numbering

~~8.4.4A quorum shall consist of four members.~~

Formatted: Bullets and Numbering

ARTICLE I - TOWN OFFICIALS

1. GENERAL GOVERNMENT

1.1 The provisions of 30-A MRSA Section 2528, as heretofore accepted by the Town, shall govern the election of Town officers, and the following officers shall be elected by secret ballot: five people to be ~~Selectmen~~Selectpeople, Assessors and Overseers of the Poor, who shall serve terms of two years, with two ~~Selectmen~~ Selectpersons to be elected in odd years and three in even years; a member of the Superintending School Committee who shall serve for three years ,and the members of the Budget Committee who shall be elected for three years. [3-46, 3-48, 1-52, 2-53, 3-76, 3-81, 11-02, 06-04, 01-05, 6-05, 6-11]

1.2 In accordance with MRSA 30-A section 2631 et seq. the ~~Selectmen~~ Selectboard shall hire a Town Manager to conduct the Town's business. [11-02]

1.3 Effective as of the 2003 Annual Town Meeting until the Town votes otherwise, ~~The~~ the Town Manager shall annually appoint the following: Town Clerk, Town Treasurer, Tax Collector, Road Commissioner, Fire Chief, and Excise Tax Collector. [11-02, 06-04, 01-05, 6-05, 6-11]

1.4 Robert's Rules of Order shall govern all meetings except when in conflict with ~~These~~ these Ordinances or unless alternative procedures have been established. [3-97]

1.5 The Town may disburse money only on the authority of a warrant drawn for the purpose and which has been (1) affirmatively voted and signed by a majority of the ~~Selectmen~~ Selectboard at a duly called public meeting,
(2) seen and signed by a majority of Selectboard ~~Selectmen~~ acting individually and
separately, or (3) signed as otherwise provided by law for the disbursement of employees' wages and benefits and/or payment of municipal education costs. [3-04]

2. BUDGET COMMITTEE

The Town shall have a Budget Committee. Its By-laws are as follows: [3-46, 3-65]

2.1 The Wiscasset Budget Committee (hereinafter "the Committee") shall be composed of nine members who are residents of Wiscasset, each serving a three year term, three of whom shall be elected each year. In the event of a vacancy in the membership or if any member of the Committee during his or her term of office shall die, become incapacitated, resign, cease to be a resident of Wiscasset,

or fail to serve, such failure to be determined by decision of the ~~Board of Selectmen~~Selectboard upon report of 4 members of the Committee, the ~~Selectmen~~ Selectboard shall promptly appoint a person to serve until the next Annual Town Meeting, and the vacancy shall then be filled by election of a candidate for the remainder of the term. [3-77]

2.2 The Committee shall convene at a convenient and public place within one week following the Annual Town Meeting to elect its ~~Chairman~~ Chairperson and Clerk. The Committee shall hold public meetings from time to time to conduct business. [3-77, 6-80, 3-98]

2.3 The Chairperson~~Chairman~~ shall preside at all meetings of the Committee when ~~he~~ s/he is in attendance, and ~~he~~ s/he shall convene the Committee by notice through the Clerk to all members as to the time and place of meeting. A special meeting of the Committee shall convene upon request of any 4 members of the Committee or by the ~~Board of Selectmen~~Selectboard in case of an emergency provided that 3 days notice is given to all other members as to the time and place of such special meeting. The Chairperson~~chairman~~ shall appoint such subcommittees and sub-committee chairmen as the ~~Budget~~ Committee may, from time to time, approve. Every such sub-committee shall expire no later than the conclusion of the next Annual Town Meeting following its approval. The Chairperson~~Chairman~~ shall be entitled to vote as any other member of the Committee. [3-77, 6-80]

2.4 The Clerk shall record the actions taken by the Committee at each meeting and shall duly notify each member as to the time and place of each meeting convened by the Chairperson~~Chairman~~. In the absence of the Chairperson~~Chairman~~ at any meeting, the Clerk shall either serve as the Chairperson~~Chairman~~ or shall appoint a Chairperson~~Chairman~~ *pro tem* from members in attendance. [3-77]

2.5 In the event of a vacancy in the office of Chairperson~~Chairman~~ or Clerk, the Committee shall elect a successor from among its members for the remainder of the term of the office vacated. In the absence of both the Chairperson~~Chairman~~ and the Clerk, the members attending any meeting shall elect a Chairperson~~Chairman~~ and a Clerk, *pro tem*, from the members in attendance. [3-77]

2.6 Five members in attendance shall constitute a quorum at any meeting of the Committee, and no official action can be taken without a quorum being then present. In the event of one or more vacancies in the Committee membership, 4 members shall constitute a quorum. Proxies for attendance or voting shall not be accepted. In the event of a tie vote, the motion voted upon shall be deemed not to have passed. [3-77]

2.7 The Committee shall meet with the ~~Selectmen~~ Selectboard at least once in every year between Annual Town Meeting and December 15, in order to determine the

adequacy of appropriated funds and other revenues for current year departmental operations. [3-77]

2.8 The Committee shall inquire into and consider every article to be submitted before any annual or special ~~town~~ Town meeting which provides for the borrowing, raising, transferring, and/or appropriation of any sum of money and shall make its recommendation to the ~~town~~ Town in regard thereto or shall report specific reasons for making no recommendation. The ~~Board of Selectmen~~Selectboard shall provide a copy of any warrant dealing with borrowing, raising, transferring and/or appropriation of any sum of money at least three days prior to the day of posting for any ~~town~~ Town meeting to the Chairperson~~Chairman~~ or Clerk of the Committee. [3-77, 3-78, 6-80, 3-98]

2.9 These by-laws may be amended by the ~~town~~ Town at any ~~annual~~Annual ~~town~~ Town ~~meeting~~Meeting. [3-77, 3-78, 6-80]

3. ~~BUILDING INSPECTOR~~CODE ENFORCEMENT OFFICER

3.1 The Town shall have a ~~Building Inspector~~Code Enforcement Officer who shall be appointed by the ~~Selectmen~~ Selectboard.~~as mandated by State Law.~~ [3-86, 3-02]

3.2 The Code Enforcement Officer ~~Building Inspector~~ shall file a copy of Building Permits issued with the Planning Board and the Clerk's office within seven working days of granting the permit, and shall retain a copy of the permit for ~~his~~ his or her own records. [3-86, 3-02]

3.3 The Code Enforcement Officer ~~Inspector~~ shall examine all buildings in the course of erection or alteration or repair as required by and for the purposes set forth in ~~25 MRSA Sections 2531 - 2361 and~~ 30-A MRSA Sections 4101 - 4104 and any other applicable statute and shall make a record of all violations of ~~this~~ the law and of any of the provisions of these ordinances with the street and location where such violations are found with the name of the owner, and/or builder and architect and all other matters relating thereto and shall make immediate report to the ~~Selectmen.~~Town Manager. [3-46, 3-02]

10 C

NOTICE TO BIDDERS

Notice is hereby given that the Town of Wiscasset will receive in sealed envelopes clearly marked "2011 Town Report Bids" for the annual report, in the office of the Town Manager at 51 Bath Road, Wiscasset, Maine until **4:00 p.m. on Tuesday, April 3rd, 2012**, for the printing of its 2011 Town Report.

Bids received after the stated time will not be considered.

The report will be presented to printers on 8 ½ by 11 sheets or electronically, per request.

Please provide us with a cost as described with the following general specifications:

Test – 60 lb Paper

- Must be printed, not photo copied
- Size – 6" by 9"
- Perfect bound, 50 lb offset
- Inside: black ink
- Cover – Multi color ink (4 color) with UV coating on white wrap- around, 10 pt. Stock
- Number of pages – approx. 175
- Number of copies - 700
- Number of 1/2 page, approx. 6 color pictures – (all pictures to print, crisp & clear)
- Include separate cost for each photo
- Table of contents at the beginning of report inside cover.
- Provide electronic pdf version

Bids filed with the Town of Wiscasset shall be opened by the Board of Selectmen on Tuesday, April 3rd, 2012 at 51 Bath Road, Wiscasset, Maine 04578.

The Town of Wiscasset reserves the right to award the bid to the lowest responsible bidder or to reject any or all bids, further the Town of Wiscasset reserves the right to waive all formalities in the reading of the Bids.

Printing must be completed by Friday, May 4th, 2012. Please quote a price per page, cover cost and per picture cost, camera ready.

Lincoln County Publishing Co.
P.O. Box 36
Damariscotta, ME 04543

Brunswick Instant Printing, Inc.
44 Cushing St.
Brunswick, ME 04011

Bath Printing Co.
44 Front Street
Bath, ME 04530

The Copy Shop
P.O. Box 246
Rt. 144
Wiscasset, ME 04578

Prints Charming Printers
P.O. Box 750
Boothbay, ME 04537

J.H. French Printing
41 Church Road
Brunswick, ME 04011

Park St. Press
8 High Street
S. Paris, ME 04281

Bangor Letter
99 Washington
Bangor, ME 04401

Xpress Copy
144 Fore Street
Portland, ME 04101

Walch Publishing
40 Walch Dr.
Portland, ME 04103

10 D

Town of Wiscasset Cupola Removal Bid

The Town of Wiscasset is seeking two (2) separate bid proposals to remove the cupola on top of the Municipal Building. 1st Bid should specify removal of cupola intact. 2nd Bid should specify removal of cupola in sections.

Specifications

1st Bid **Remove and save cupola** **Bid Price $**_____

- Carefully remove the cupola, secure on Town trailer (provided), and save for the Town to transport and store.
- Ensure the Municipal Building is weather tight, during all work , non- work cycles.
- Remove all existing base flashing.
- Install new framing and insulation to match existing roof. (Existing roof appears to be a built-up roof consisting of 2 x 6 framing foam insulation, strapping, plywood and shingles). See attached drawings.
- Frame in existing opening with wood framing (minimum 2' x 6'). The roof sheathing shall be flush and secure with the trusses, supports and existing deck.
- The contractor shall guarantee the workmanship and water tightness for eighteen months.
- Original roof and cold roof both need to be watertight.
- Install ¾ inch CDX plywood.
- Install ice and water shield.
- Install new shingles, toothing in to existing. New shingles shall match the existing as closely as possible.

2nd Bid: **Removal of cupola** **Bid Price $**_____

- Carefully remove the cupola and return any materials of value to the Town. Dispose of all other materials.
- Protect the Municipal Building from weather, making weather tight, during all work and after work is completed.
- Remove all existing base flashing.
- Install new framing and insulation to match existing roof. (Existing roof appears to be a built-up roof consisting of 2 x 6 framing foam insulation, strapping, plywood and shingles). See attached drawings.
- Frame in existing opening with wood framing (minimum 2' x 6'). The roof sheathing water seal shall be secure and flush with the existing deck trusses and sheathing supports.
- The contractor shall guarantee the workmanship and water tightness for eighteen months.
- Install ¾ inch CDX plywood.
- Install ice and water shield.
- Install new shingles, toothing in to existing. New shingles shall match the existing as closely as possible.

Signature: _____ Date: _____

Printed Name: _____ Company Name: _____

Address: _____

Telephone Number: _____ E-mail: _____

Bids are due by 12:00 Noon on April 3rd and will be opened at the Selectmen's meeting the same evening beginning at 7pm. The awarded bidder will be expected to complete the job by **June 30th, 2012**.

Companies will supply three (3) references where they have completed similar work.

The Town of Wiscasset reserves the right to waive all informalities in bids, to accept any bid, or any portion thereof, or to reject any or all bids should it be deemed in it its best interest to do so.

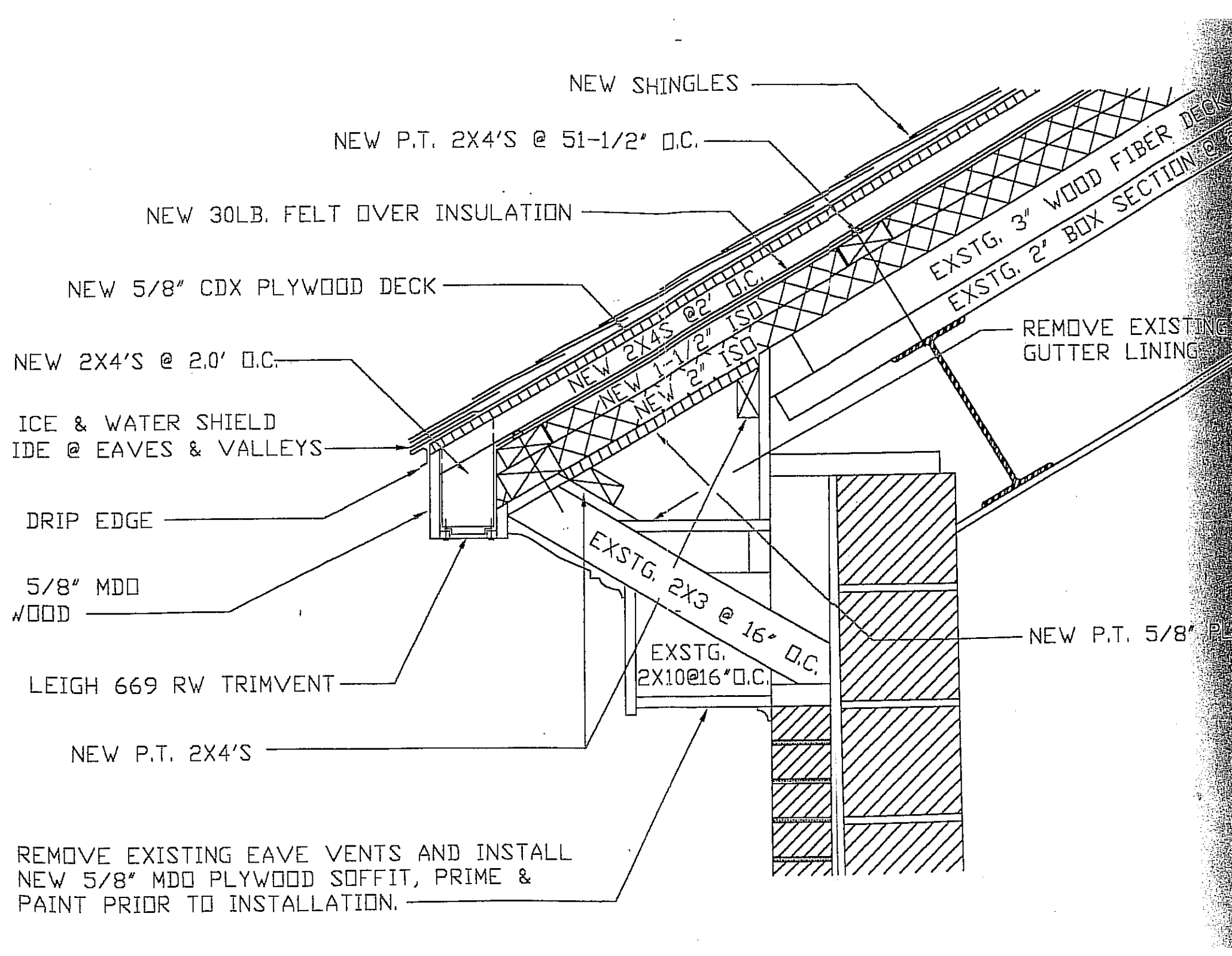
NEW SHINGLES
NEW P.T. 2X4'S @ 51-1/2" O.C.
NEW 30LB. FELT OVER INSULATION
NEW 5/8" CDX PLYWOOD DECK
NEW 2X4'S @ 2.0' O.C.
ICE & WATER SHIELD
IDE @ EAVES & VALLEYS
DRIP EDGE
5/8" MDO
WOOD
LEIGH 669 RW TRIMVENT
NEW P.T. 2X4'S
REMOVE EXISTING EAVE VENTS AND INSTALL
NEW 5/8" MDO PLYWOOD SOFFIT, PRIME &
PAINT PRIOR TO INSTALLATION.
NEW 2X4S @2' O.C.
NEW 1-1/2" ISO
NEW 2" ISO
EXSTG. 3" WOOD FIBER DECK
EXSTG. 2" BOX SECTION @
REMOVE EXISTING
GUTTER LINING
EXSTG. 2X3 @ 16" O.C.
EXSTG.
2X10@16"O.C.
NEW P.T. 5/8" PL

Bidders List

Paul Foley
Fieldstone Company
110 Gibbs Road
Wiscasset, ME 04578

Ed Goud
Goud Construction
105 Old Dresden Road
Wiscasset, ME 04578

Chet Grover
Chet Grover Construction
29 Rocky Ridge Road
Wiscasset, ME 04578

Doug Merrill
Doug Merill & Son Builders
211 Old Bath Road
Wiscasset, ME 04578

Dana Fields
Integrity Roofing
19 Sunset Ridge Road
Wiscasset, ME 04578

Tim Hanley, Inc.
14 Union St.
Wiscasset, ME 04578

John Bailey, Jr.
John Bailey Jr. Builder Inc.
P.O. Box 292
Wiscasset, ME 04578

11 D

Time Warner Cable®

March 23, 2012

Town Manager Don Gerrish
Town of Wiscasset, ME
51 Bath Road
Wiscasset, ME 04578

Re: ***Time Warner Cable Internal Restructuring***

Dear Town Manager Gerrish:

I am writing to advise you of an internal restructuring by Time Warner Cable Inc. ("**TWC**") involving the cable franchisee in your community. As you may know, we operate our cable systems through various indirect, wholly-owned subsidiaries, including Time Warner NY Cable LLC, the franchise-holder for the system serving your community. In order to streamline our organization, we are undertaking an internal reorganization (the "**Transaction**") whereby our cable operations will be conducted through seven regional entities designed to simplify management reporting and create a more geographically rational structure. Upon completion of the Transaction, the local system and franchise serving your community will be held by Time Warner Cable Northeast LLC, an indirect, wholly-owned subsidiary of TWC.

The Transaction will not result in a transfer of control – TWC will retain ultimate ownership and management authority over the cable system in your community. This internal Transaction will have absolutely no impact on the cable system in your community, its operations or our local staff or management, and we will continue to do business as Time Warner Cable. In particular, there will be no change in our commitment to provide our customers with the best variety and quality in entertainment and information services, all at competitive rates with excellent customer care. Naturally, Time Warner Cable Northeast LLC will continue to comply with all franchise terms and conditions and be subject to all applicable law.

The Transaction does not require any action on your part. Should you have any questions regarding the Transaction, please contact me at rory.whelan@twcable.com or 518-640-8569.

We look forward to continuing our long and mutually beneficial relationship with your community.

Sincerely,

TIME WARNER CABLE INC.

By: _____
Rory Whelan
Regional Vice President

11 E

Town of Wiscasset

Budget Meeting
April 7th, 2012 at 8:00 am

Airport	8:00 am
Assessing	8:30 am
Selectmen / Boards and Committees	8:45 am
Administration / Municipal Insurance	9:00 am
Contractual / Animal Control	9:15 am
Police	9:30 am
Municipal Building	10:00 am
Celebrations	10:15 am
Community Organizations	10:30 am
Library	10:45 am
Waterfront	11:00 am
EMA ./ EMS	11:15 am
Shellfish	11:45 am
Transfer Station	12:00 pm
BREAK	***12:30 pm to 12:45 pm – snacks & sandwiches***
Wastewater	12:45 pm
Public Works	1:15 pm
Cemeteries	1:45 pm
Planning	2:00 pm
Parks and Recreation	2:15 pm
Fire	2:45 pm
Finance	3:15 pm
Code Enforcement	3:30 pm
Town Clerk	3:45 pm
General Assistance	4:00 pm
Adjourn	4:15 pm

Budget Meeting
April 10th, 2012 at 6:30 pm

Senior Center	6:30 pm
Public Hearing	7:00 pm